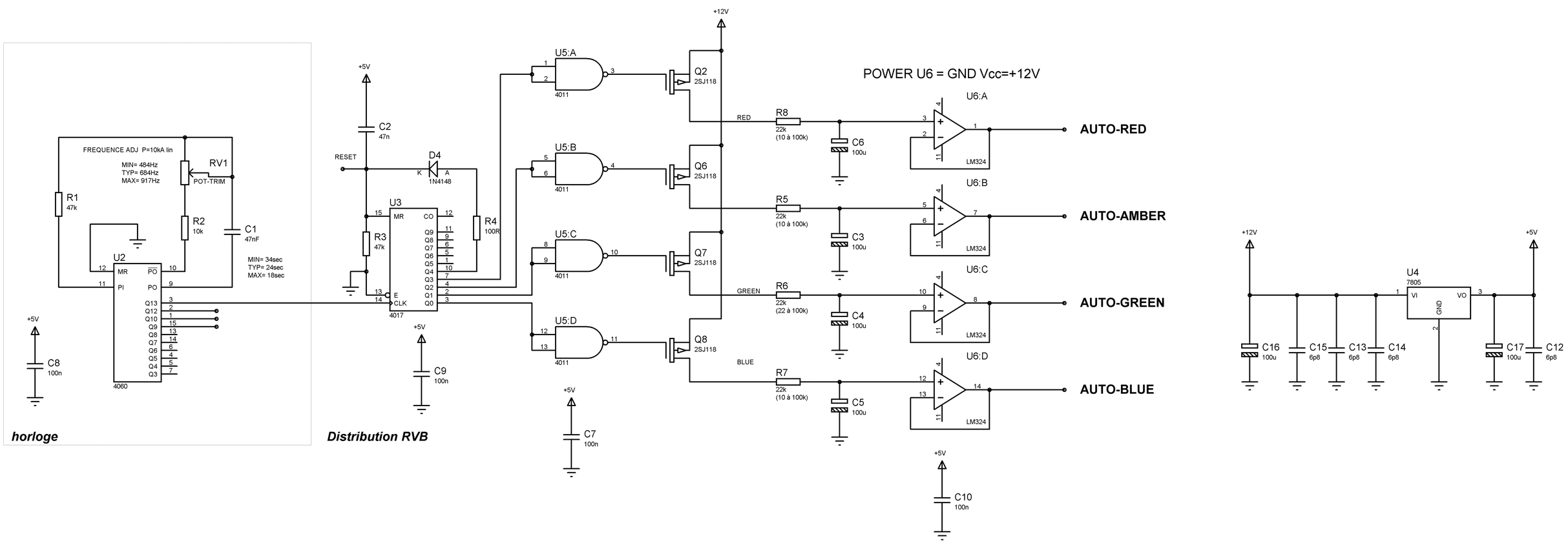
FREQUENCE ADJ P=10kA lin
MIN= 484Hz
TYP= 684Hz
MAX= 917Hz
RV1
POT-TRIM
R1
47k
R2
10k
C1
47nF
MIN= 34sec
TYP= 24sec
MAX= 18sec
U2
4060
C8
100n
horloge
+5V
C2
47n
RESET
D4
1N4148
U3
4017
R3
47k
R4
100R
C9
100n
Distribution RVB
U5:A
U5:B
U5:C
U5:D
4011
C7
100n
+12V
Q2
Q6
Q7
Q8
2SJ118
RED
GREEN
BLUE
R8
R5
R6
R7
22k
(10 à 100k)
(22 à 100k)
C6
C3
C4
C5
100u
C10
100n
POWER U6 = GND Vcc=+12V
U6:A
U6:B
U6:C
U6:D
LM324
AUTO-RED
AUTO-AMBER
AUTO-GREEN
AUTO-BLUE
U4
7805
VI
VO
GND
C16
C15
C13
C14
C17
C12
6p8