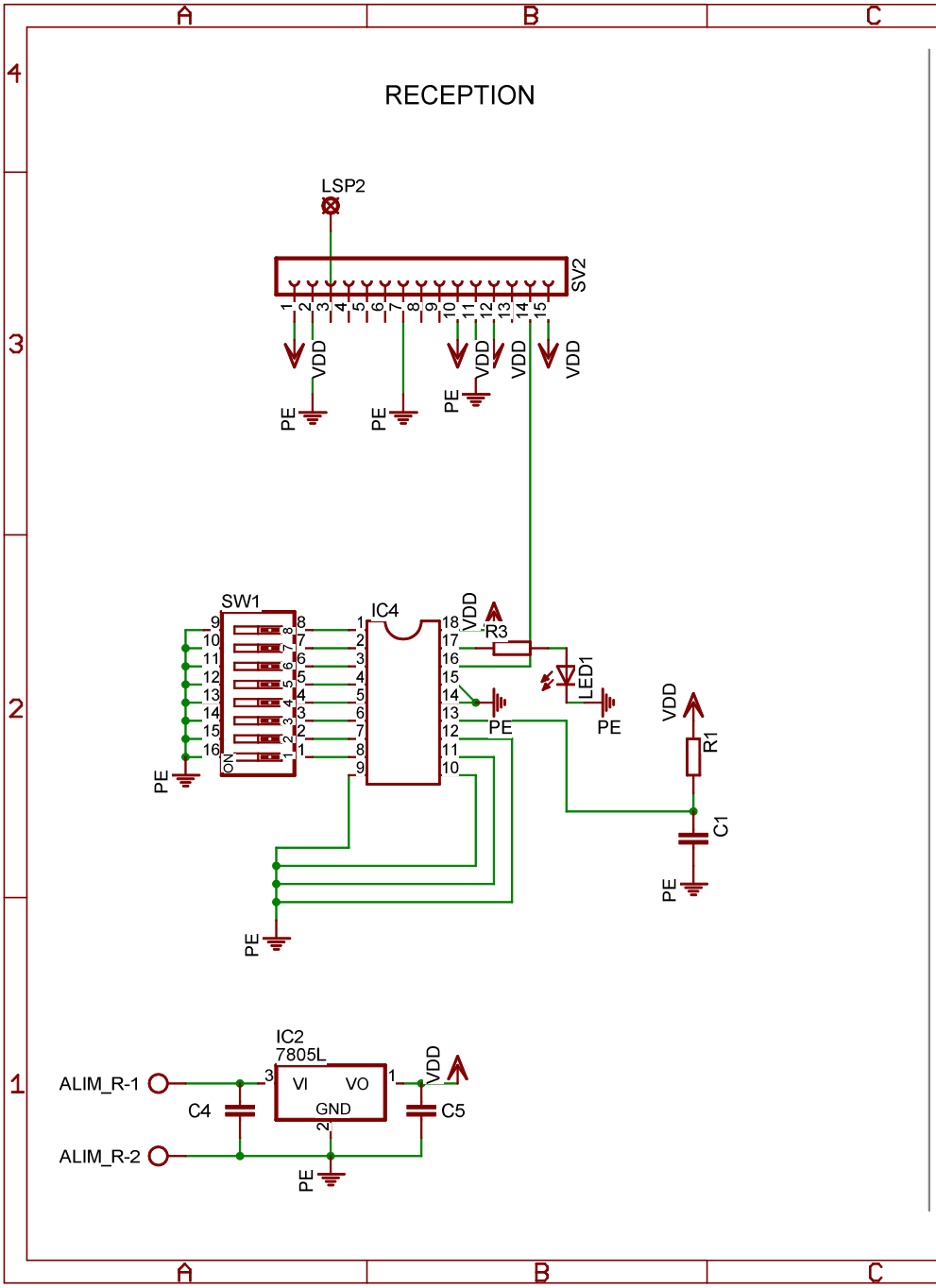
RECEPTION
LSP2
SV2
VDD
PE
SW1
IC4
R3
LED1
R1
C1
IC2
7805L
VI
VO
GND
ALIM_R-1
ALIM_R-2
C4
C5

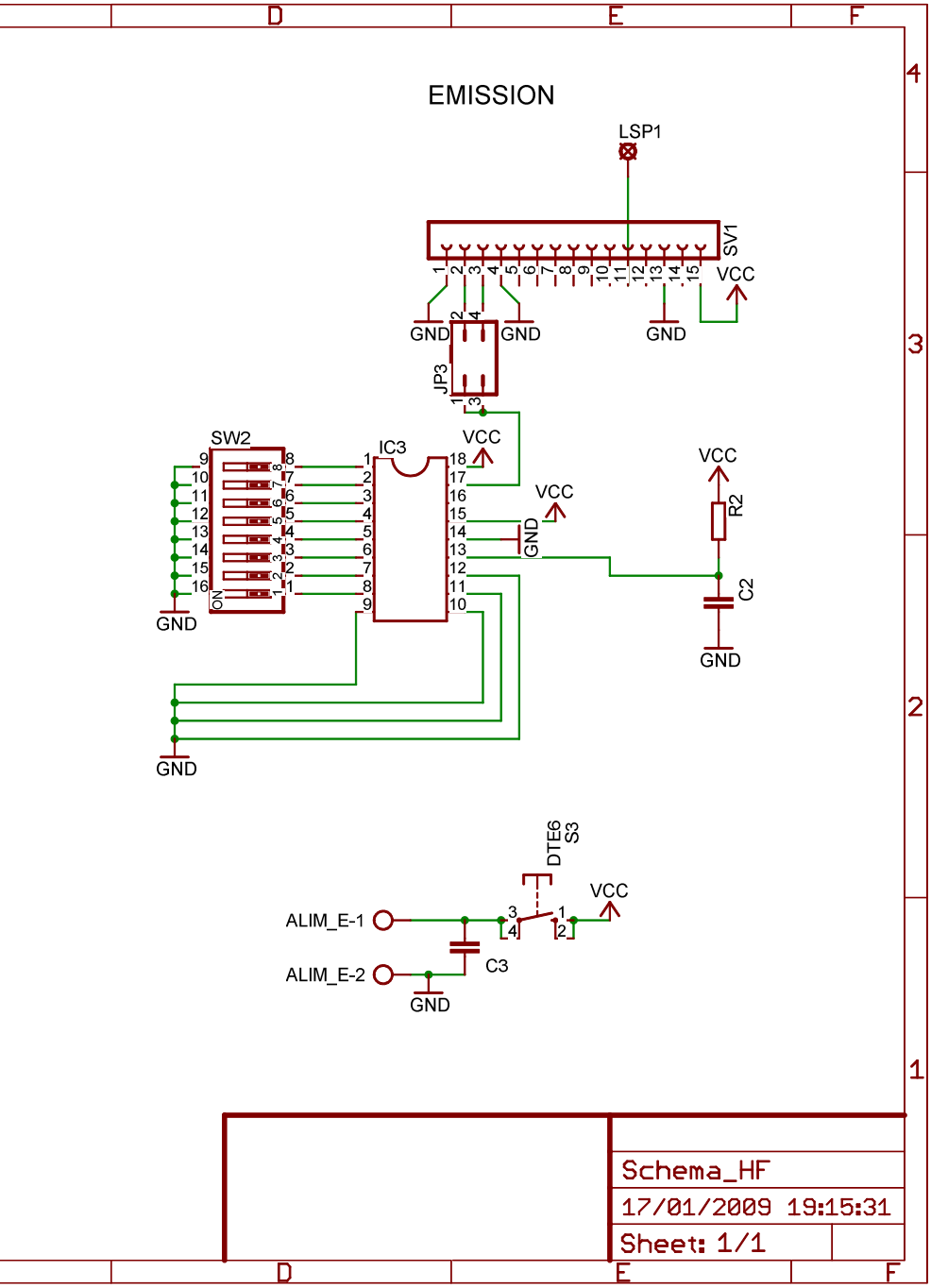
EMISSION
LSP1
SV1
VCC
GND
JP3
SW2
IC3
R2
C2
DTE6
S3
ALIM_E-1
ALIM_E-2
C3
Schema_HF
17/01/2009 19:15:31
Sheet: 1/1