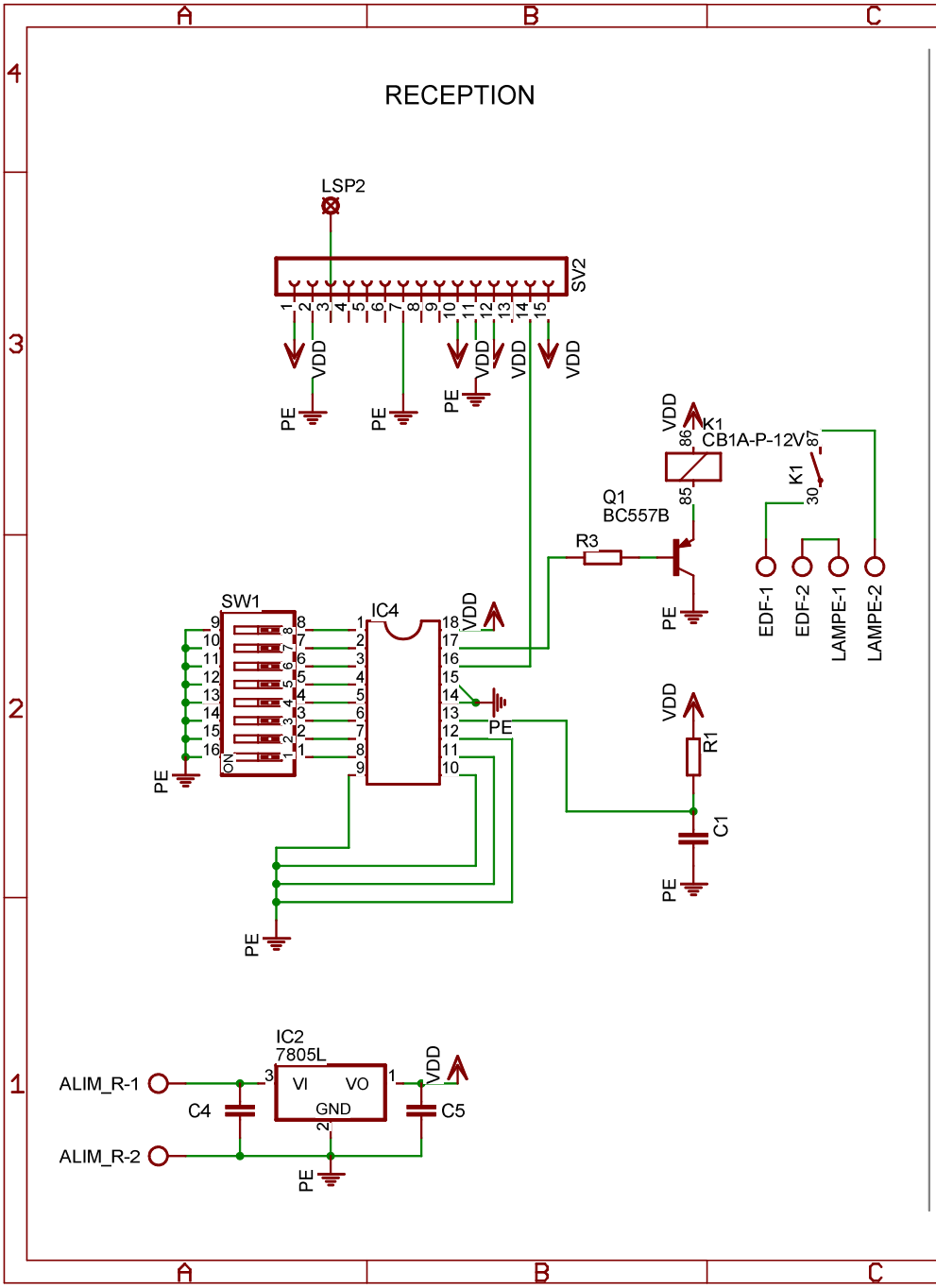
RECEPTION
LSP2
SV2
VDD
PE
K1
CB1A-P-12V
Q1
BC557B
R3
EDF-1
EDF-2
LAMPE-1
LAMPE-2
SW1
IC4
R1
C1
IC2
7805L
VI
VO
GND
ALIM_R-1
ALIM_R-2
C4
C5

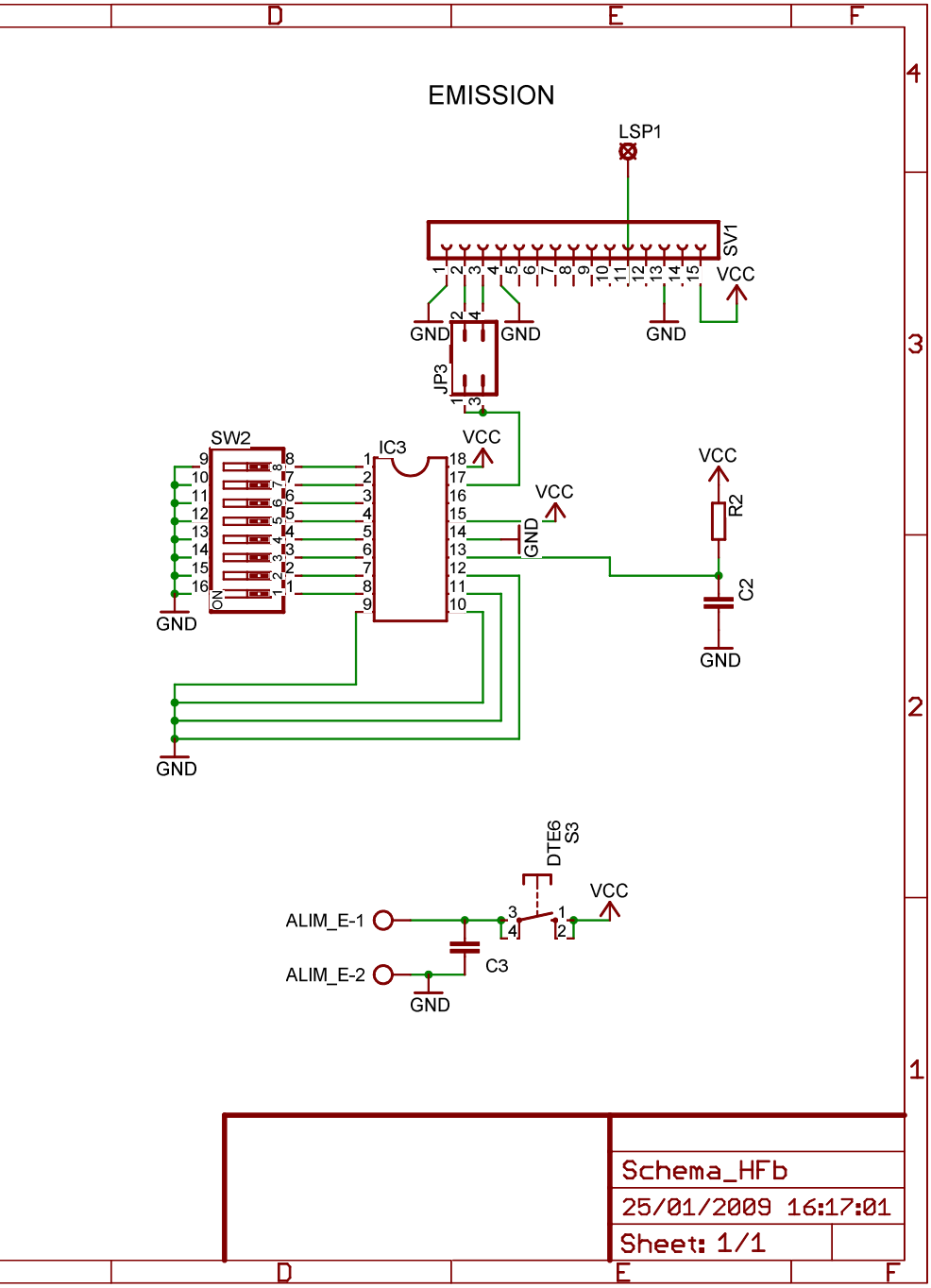
EMISSION
LSP1
SV1
VCC
GND
JP3
SW2
IC3
R2
C2
DTE6
S3
ALIM_E-1
ALIM_E-2
C3
Schema_HFb
25/01/2009 16:17:01
Sheet: 1/1