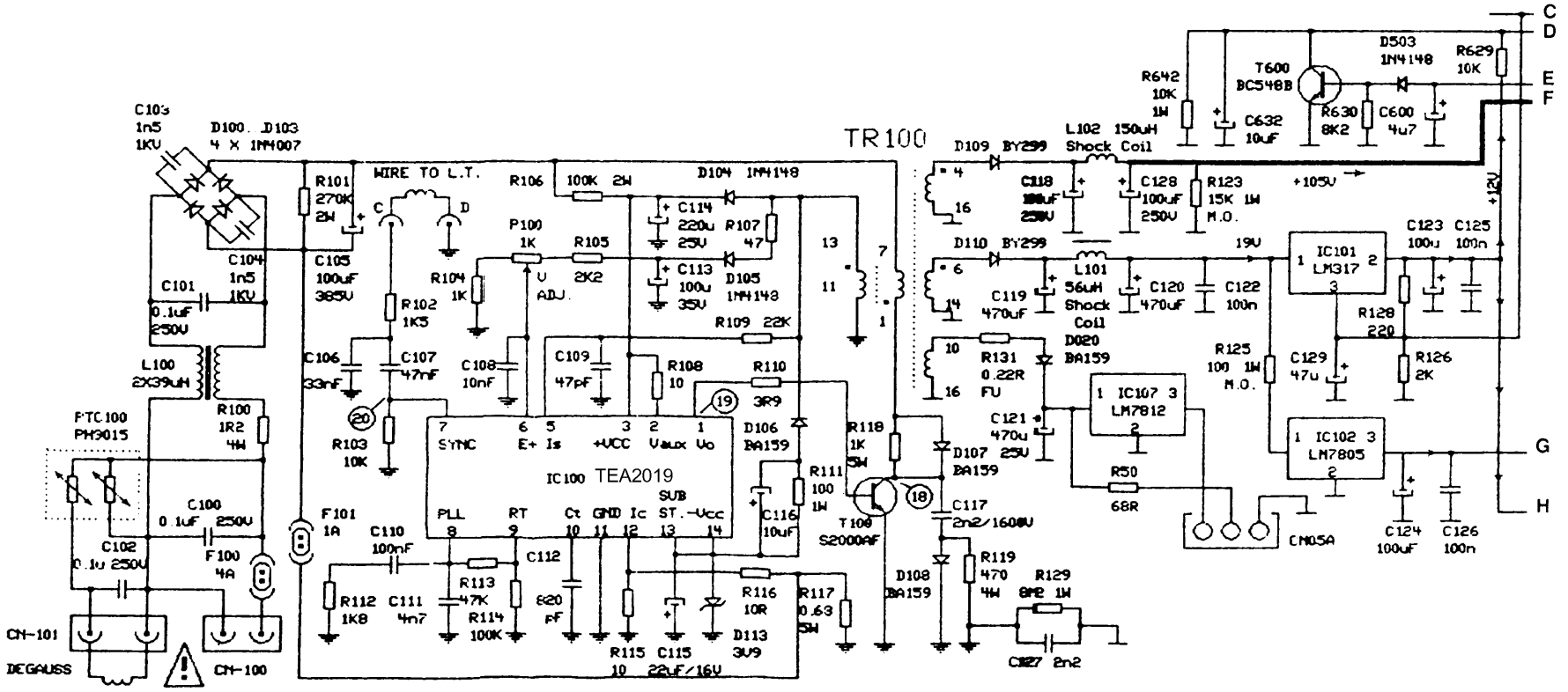
TR100
C103 1n5 1KV
D100..D103 4 X 1N4007
R101 270K 2W
WIRE TO L.T.
R106 100K 2W
D104 1N4148
C114 220u 25V
R107 47
P100 1K
R105 2K2
C113 100u 35V
D105 1N4148
R104 1K
V ADJ.
R102 1K5
C101 0.1uF 250V
C104 1n5 1KV
C105 100uF 385V
L100 2X39uH
C106 33nF
C107 47nF
C108 10nF
C109 47pF
R108 10
R109 22K
R110 3R9
R103 10K
PTC100 PH9015
R100 1R2 4W
C100 0.1uF 250V
C102 0.1u 250V
F100 4A
F101 1A
IC100 TEA2019
SYNC
E+ Is
+VCC
Vaux Vo
PLL
RT
Ct
GND Ic
SUB ST.
-Vcc
C110 100nF
R112 1K8
C111 4n7
R113 47K
R114 100K
C112 820 pF
R115 10
C115 22uF/16V
R116 10R
D113 3V9
R117 0.63 5W
D106 BA159
C116 10uF
R111 100 1W
R118 1K 5W
T100 S2000AF
D107 BA159
C117 2n2/1600V
D108 BA159
R119 470 4W
R129 8R2 1W
C127 2n2
CN-101
DEGAUSS
CN-100
D109 BY299
D110 BY299
L102 150uH Shock Coil
C118 100uF 250V
C128 100uF 250V
R123 15K 1W M.O.
+105V
L101 56uH Shock Coil
C119 470uF
C120 470uF
C122 100n
19V
IC101 LM317
C123 100u
C125 100n
R128 220
R126 2K
R131 0.22R FU
D020 BA159
C121 470u 25V
IC107 LM7812
R50 68R
R125 100 1W M.O.
C129 47u
IC102 LM7805
C124 100uF
C126 100n
CN05A
R642 10K 1W
C632 10uF
T600 BC548B
R630 8K2
D503 1N4148
C600 4u7
R629 10K
+12V
C
D
E
F
G
H