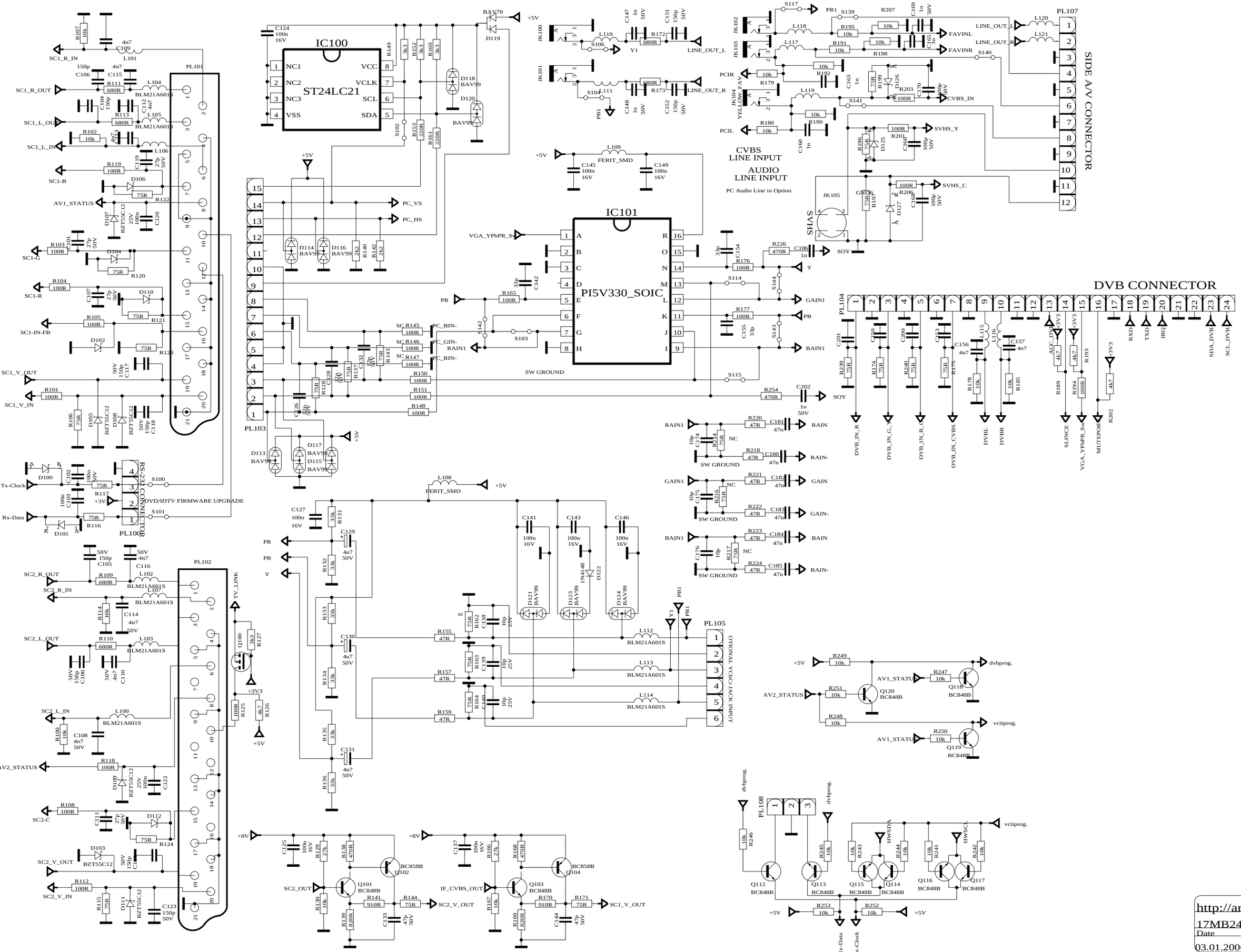

FROM 100

http://arianotlari.com

17MB24-1 PERIP. 1of5

Date	Author
03.01.2006	ISMAIL YILMAZLA

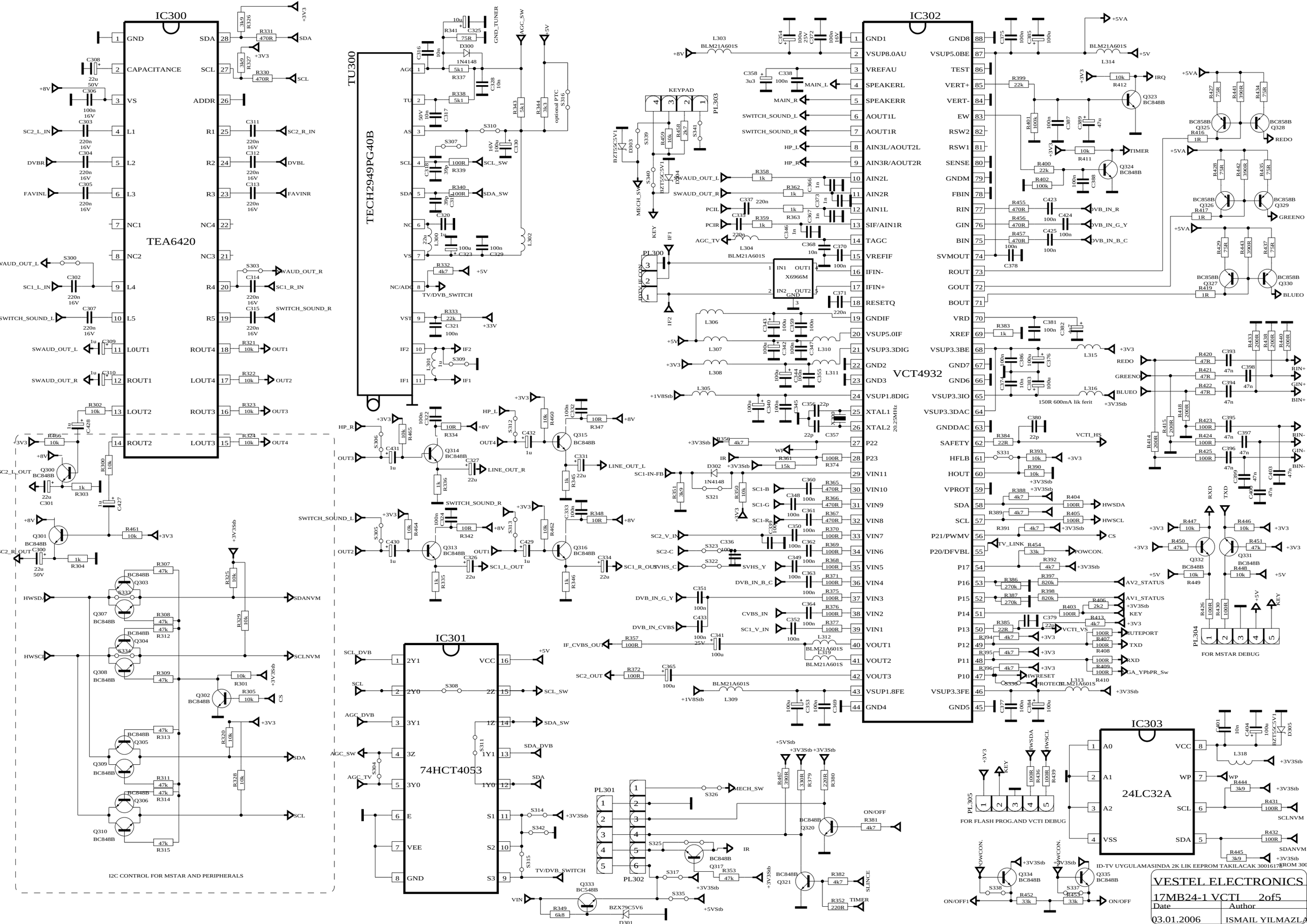
IC300
TEA6420
IC302
VCT4932
TU300
TECH2949PG40B
IC301
74HCT4053
IC303
24LC32A
PL300
PL301
PL302
PL303
PL304
PL305
KEYPAD
X6966M
20.25MHz
FOR MSTAR DEBUG
FOR FLASH PROG.AND VCTI DEBUG
I2C CONTROL FOR MSTAR AND PERIPHERALS
ID-TV UYGULAMASINDA 2K LIK EEPROM TAKILACAK 3001617
VESTEL ELECTRONICS
17MB24-1 VCTI 2of5
Date
03.01.2006
Author
ISMAIL YILMAZLA

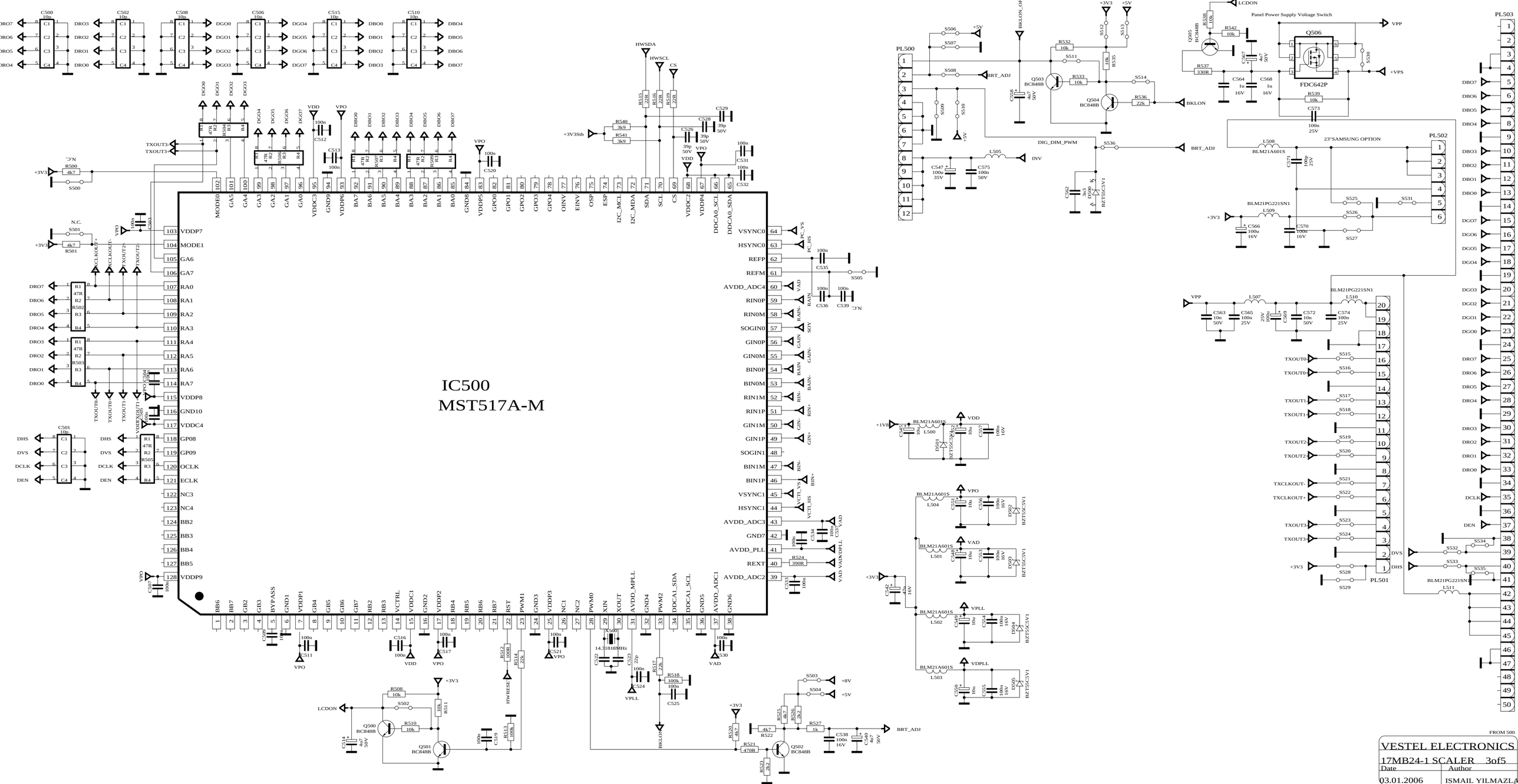

VESTEL ELECTRONICS

17MB24-1 SCALER 3of5

Date	Author
03.01.2006	ISMAIL YILMAZLA

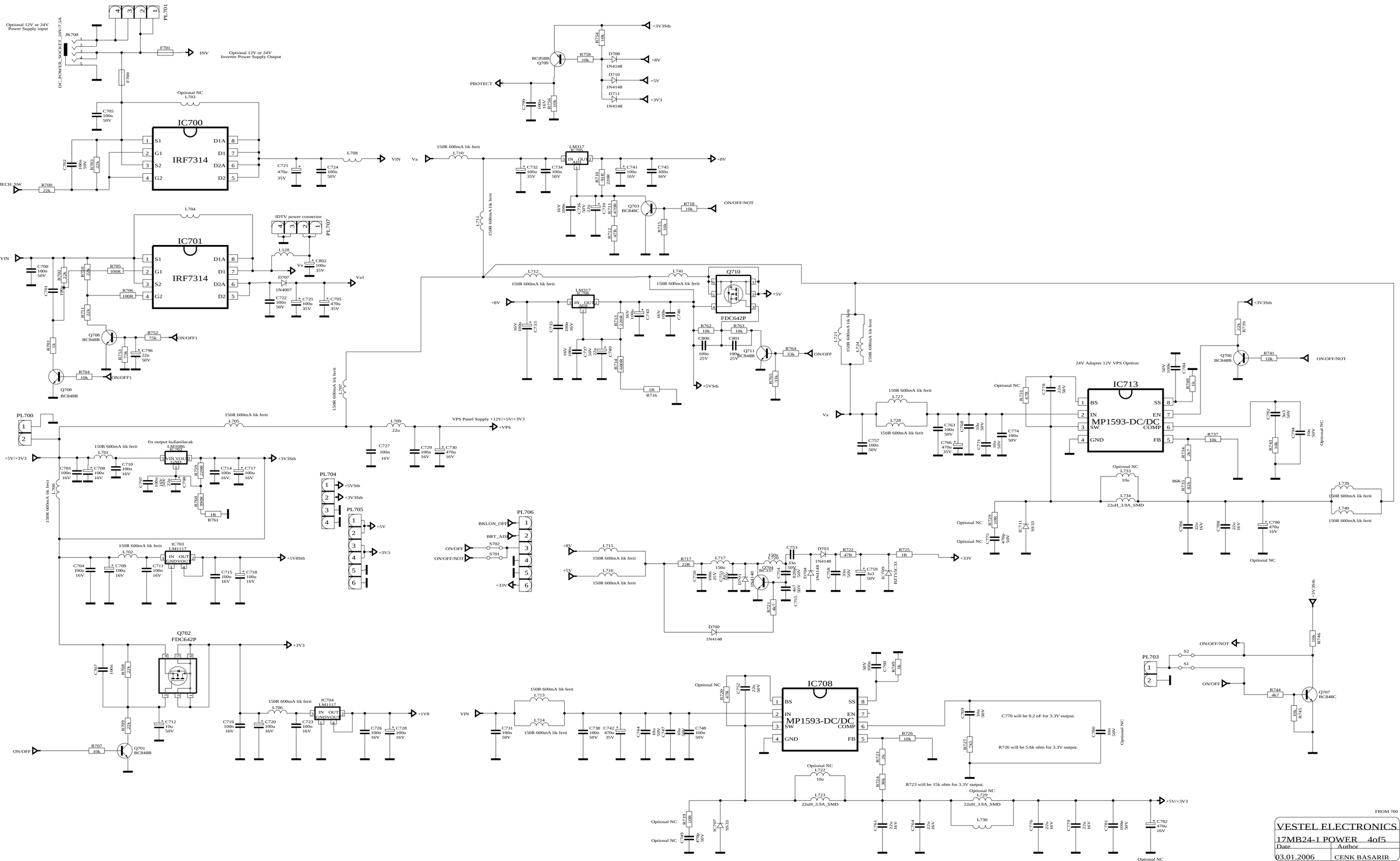
Optional 12V or 24V Power Supply input
JK700
DC_POWER_SOCKET_20V/7.5A
PL701
F701
INV
Optional 12V or 24V Inverter Power Supply Output
F700
Optional NC
L703
C705 100n 50V
IC700
IRF7314
S1
G1
S2
G2
D1A
D1
D2A
D2
C702 100n 50V
R703 22k
R700 22k
TECH_SW
C721 470u 35V
C724 100n 50V
L708
VIN
+3V3Stb
BC858B Q709
R758 10k
R754 10k
D708 1N4148
+8V
D710 1N4148
+5V
D711 1N4148
+3V3
PROTECT
C709 100n 16V
R756 10k
150R 600mA lik ferit
L710
Va
LM317 IC705
IN OUT ADJ
C732 100u 35V
C734 100n 50V
R710 91k
R711 220k
C741 100u 16V
C745 100n 16V
+8V
C746 100n 50V
C739 22u 50V
R714 470k
Q703 BC848C
R718 10k
ON/OFF/NOT
R712 47k
R715 10k
L711
L704
IDTV power connector
PL707
L128
C802 100u 35V
Va
Va1
IC701
IRF7314
C700 100n 50V
R702 22k
R705 100R
R706 100R
R750 22k
C701 10u
R751 22k
D707 1N4007
C722 100n 50V
C725 100u 35V
C795 470u 35V
Q708 BC848B
R752 75k
ON/OFF1
R753 75k
C796 22u 50V
R701 1k
R704 10k
ON/OFF1
Q700 BC848B
L712
150R 600mA lik ferit
L741
150R 600mA lik ferit
Q710
FDC642P
+5V
+8V
LM317 IC706
IN OUT ADJ
C733 100n 16V
C735 100n 16V
R713 220R
C743 100n 16V
C746 100n 16V
C737 50V 20n
C740 22u 50V
R714 680R
R716 1R
R762 10k
R763 10k
C800 100n 25V
C801 100n 25V
Q711 BC848B
R764 33k
ON/OFF
R765 33k
+5VStb
L721
150R 600mA lik ferit
L724
150R 600mA lik ferit
+3V3Stb
R739 22k
Q706 BC848B
R741 10k
ON/OFF/NOT
24V Adapter 12V VPS Oprtion
Optional NC
R731 470k
C778 22n 50V
C784 50V 100n
R746 1k
IC713
MP1593-DC/DC
BS
IN
SW
GND
SS
EN
COMP
FB
L727
150R 600mA lik ferit
L728
150R 600mA lik ferit
C757 100n 50V
C763 100n 50V
C768 10u 50V
C766 470u 35V
C771 10u 50V
C774 100n 50V
R737 10k
C792 3n3 50V
R743 10k
C794 10n 50V
Optional NC
R734 2k7
R735 49k9
86K5
L733 10u
Optional NC
L734 22uH_3.9A_SMD
L730
150R 600mA lik ferit
L740
150R 600mA lik ferit
C786 22u 16V
C788 22u 16V
C790 470u 16V
Optional NC
R729 10k
Optional NC
C775 470p 50V
Optional NC
IC711 SS3
PL700
+5V/+3V3
150R 600mA lik ferit
L705
L709 22u
VPS Panel Supply +12V/+5V/+3V3
+VPS
C727 100n 16V
C729 100n 16V
C730 470u 16V
150R 600mA lik ferit
L701
fix output kullanilacak
LM1086 IC702
VIN VOUT GND
C703 100n 16V
C708 100n 16V
C710 100n 16V
C797 100n 50V
C798 10u 50V
R759 220R
R760 390R
R761 1R
C714 100n 16V
C717 100u 16V
+3V3Stb
150R 600mA lik ferit
L700
PL704
+5VStb
+3V3Stb
PL705
+5V
+3V3
PL706
BKLON_OFF
BRT_ADJ
ON/OFF
ON/OFF/NOT
S702
S701
+33V
150R 600mA lik ferit
L702
IC703
LM1117
IN OUT
GND/VOUT
C704 100n 16V
C709 100u 16V
C711 100n 16V
C715 100n 16V
C718 100u 16V
+1V8Stb
+8V
+5V
L715
150R 600mA lik ferit
L716
150R 600mA lik ferit
R717 22R
L717 150u
C750 100n 16V
C751 100n 16V
C752 100n 16V
C753 33n 50V
Q704 BC537
C754 820p 50V
C755 4n7 50V
R721 4k7
D701 1N4148
D702 1N4148
D703 1N4148
D704 1N4148
R722 47R
C758 33n 50V
C759 3u3 50V
R725 1R
IC712 BZ155C-33
+33V
D700 1N4148
Q702 FDC642P
+3V3
C707 100n
R708 22k
R709 22k
C712 10u 50V
ON/OFF
R707 10k
Q701 BC848B
150R 600mA lik ferit
L706
IC704
LM1117
IN OUT
GND/VOUT
C719 100n 16V
C720 100u 16V
C723 100n 16V
C726 100n 16V
C728 100u 16V
+1V8
VIN
150R 600mA lik ferit
L713
L714
150R 600mA lik ferit
C731 100n 50V
C738 100n 50V
C742 470u 35V
C744 10n 50V
C747 10u 50V
C748 100n 50V
Optional NC
R720 47R
C762 10u 50V
IC708
MP1593-DC/DC
BS
IN
SW
GND
SS
EN
COMP
FB
C760 50V 100n
R749 1k
R726 10k
R723 2k
R724 390k
C769 10n 50V
R727 7k5
C770 will be 8.2 nF for 3.3V output.
R726 will be 5.6k ohm for 3.3V output.
C780 10n 50V
Optional NC
R723 will be 15k ohm for 3.3V output.
Optional NC
L722 10u
L723 22uH_3.9A_SMD
Optional NC
L729 22uH_3.9A_SMD
L730
+5V/+3V3
Optional NC
R719 10R
Optional NC
C749 470p 50V
IC707 SS3
C761 22u 16V
C764 22u 16V
C776 22u 16V
C779 22u 16V
C781 100n 50V
C782 470u 16V
Optional NC
PL703
S2
S1
ON/OFF/NOT
ON/OFF
R744 4k7
R745 10k
Q707 BC848C
+3V3Stb
R746 10k
FROM 700
VESTEL ELECTRONICS
17MB24-1 POWER 4of5
Date
03.01.2006
Author
CENK BASARIR

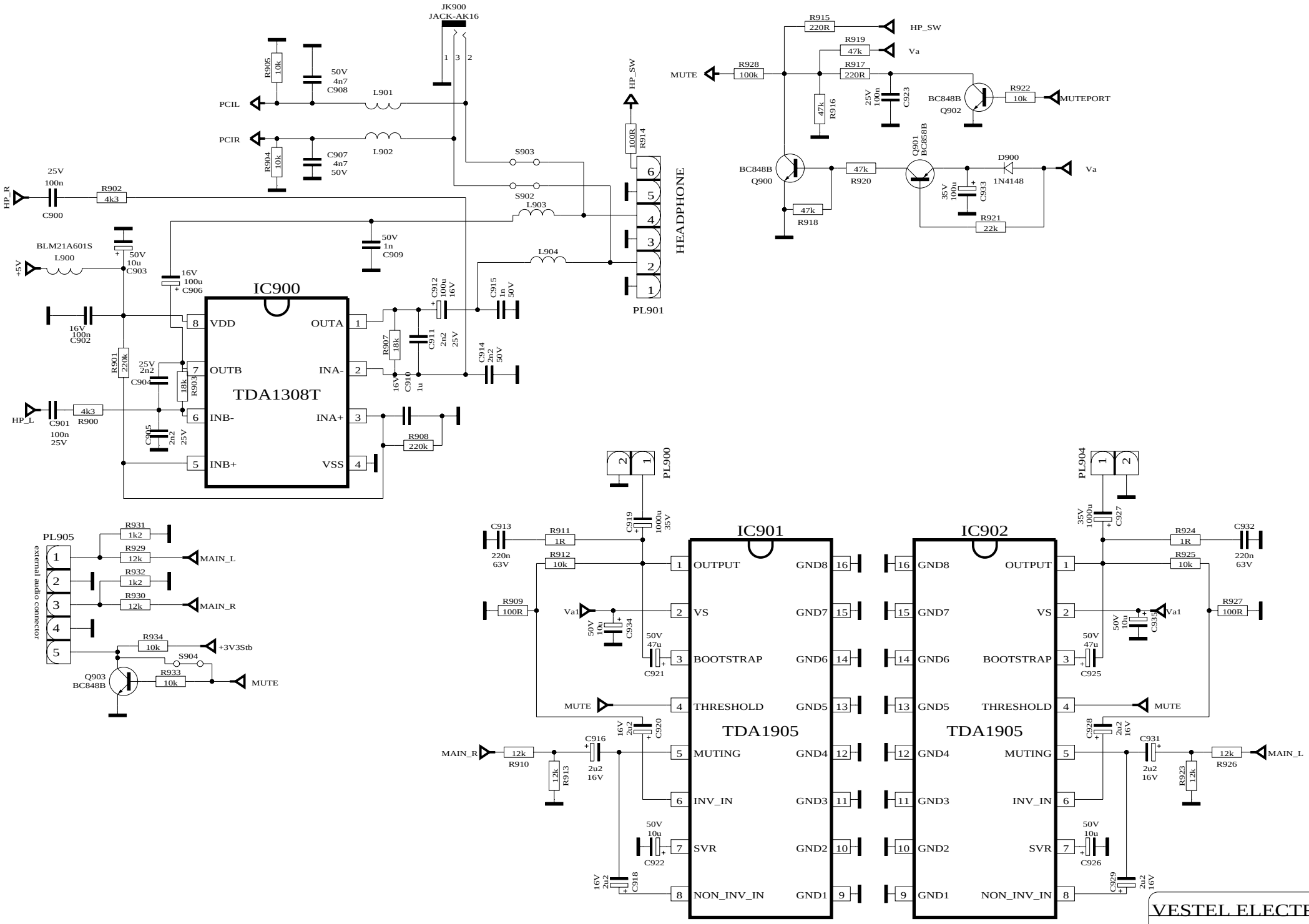

VESTEL ELECTRONICS

17MB24-1 AUDIO 5of5

Date	Author
03.01.2006	ISMAIL YILMAZLA