HiFi ENGINE®

For more Hi-Fi manuals and set-up information
please visit www.hifiengine.com
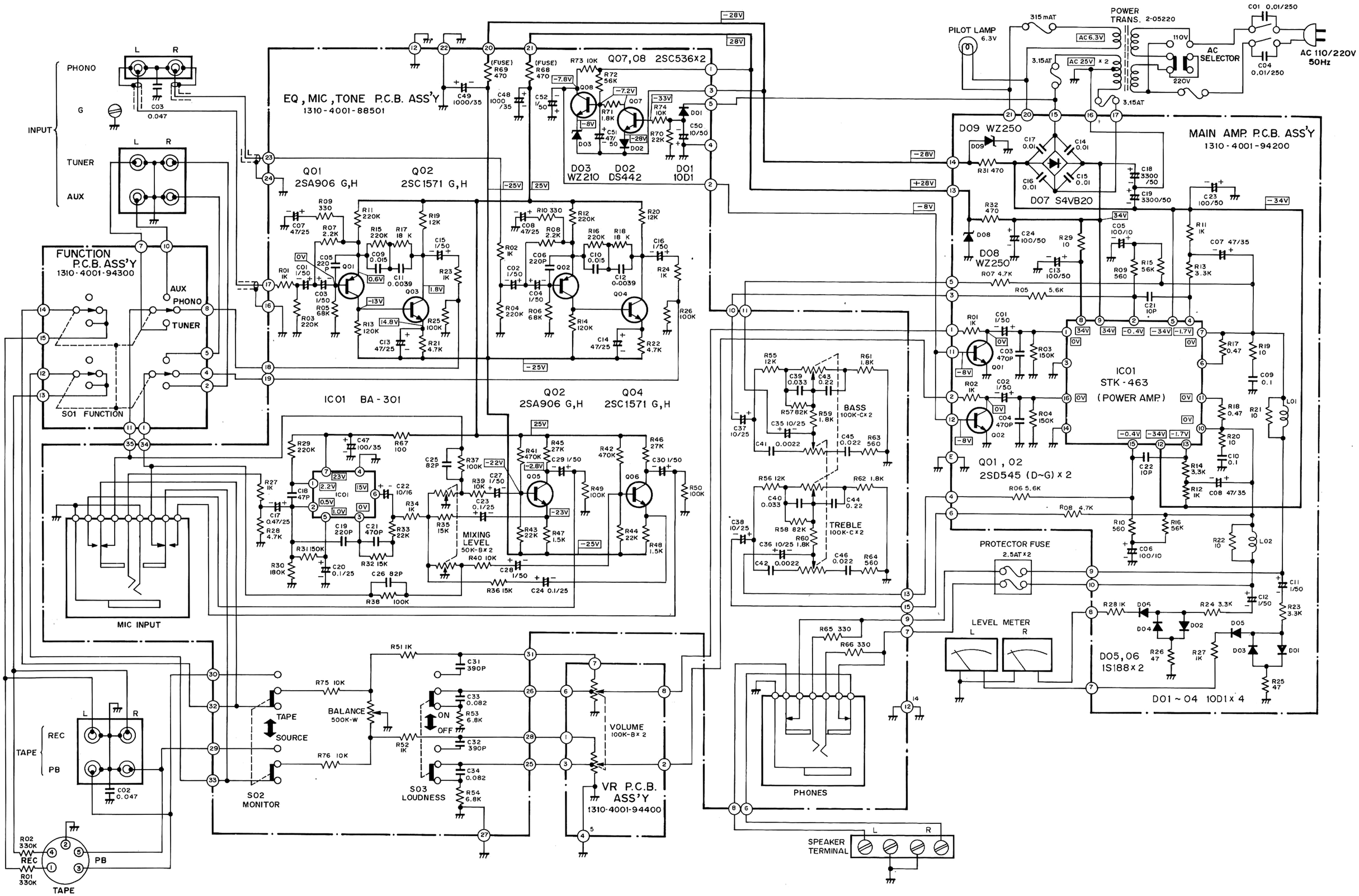
SCHEMATIC DIAGRAM / SCHALTBILD / SCHÉMA / SCHEMATISCH DIAGRAM / SCHEMATISKT DIAGRAM