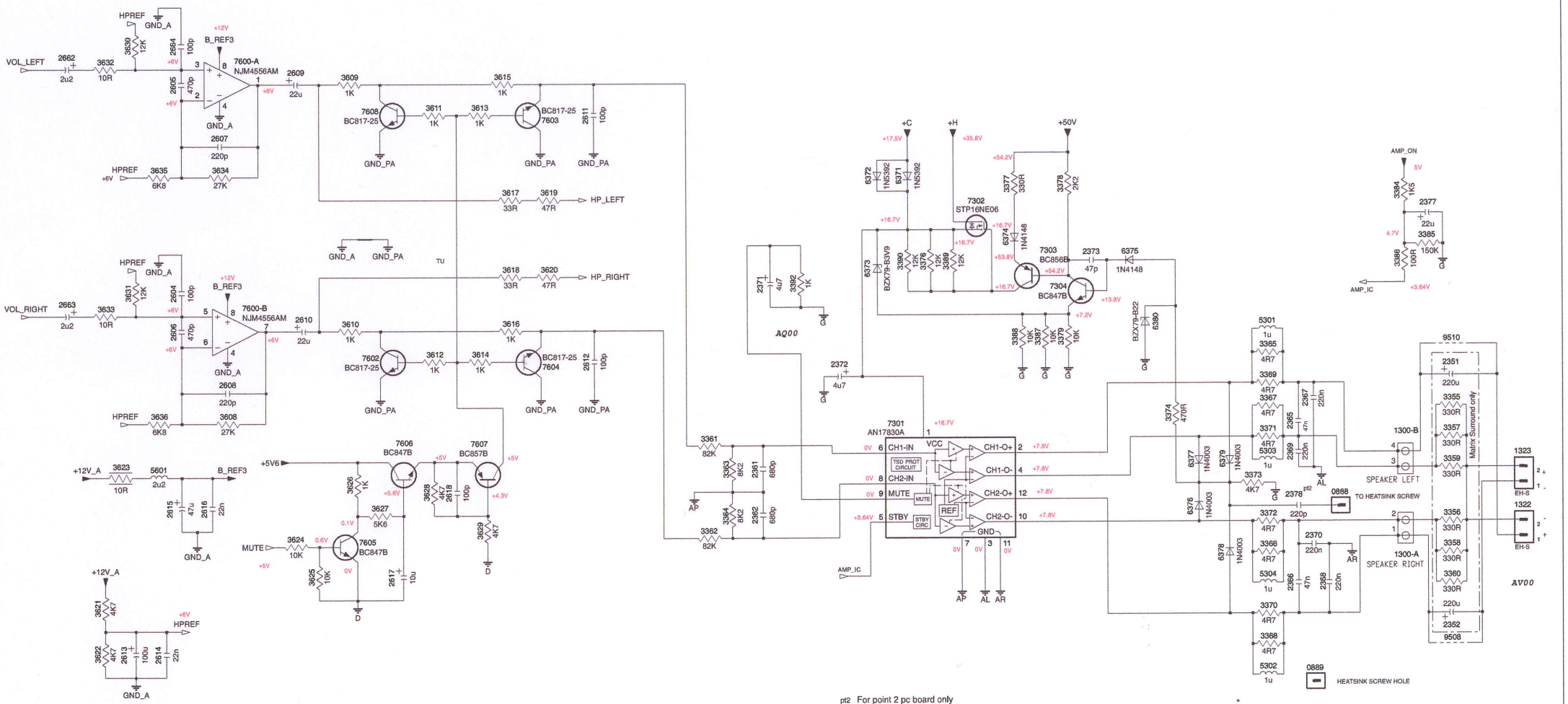

pt2 For point 2 pc board only