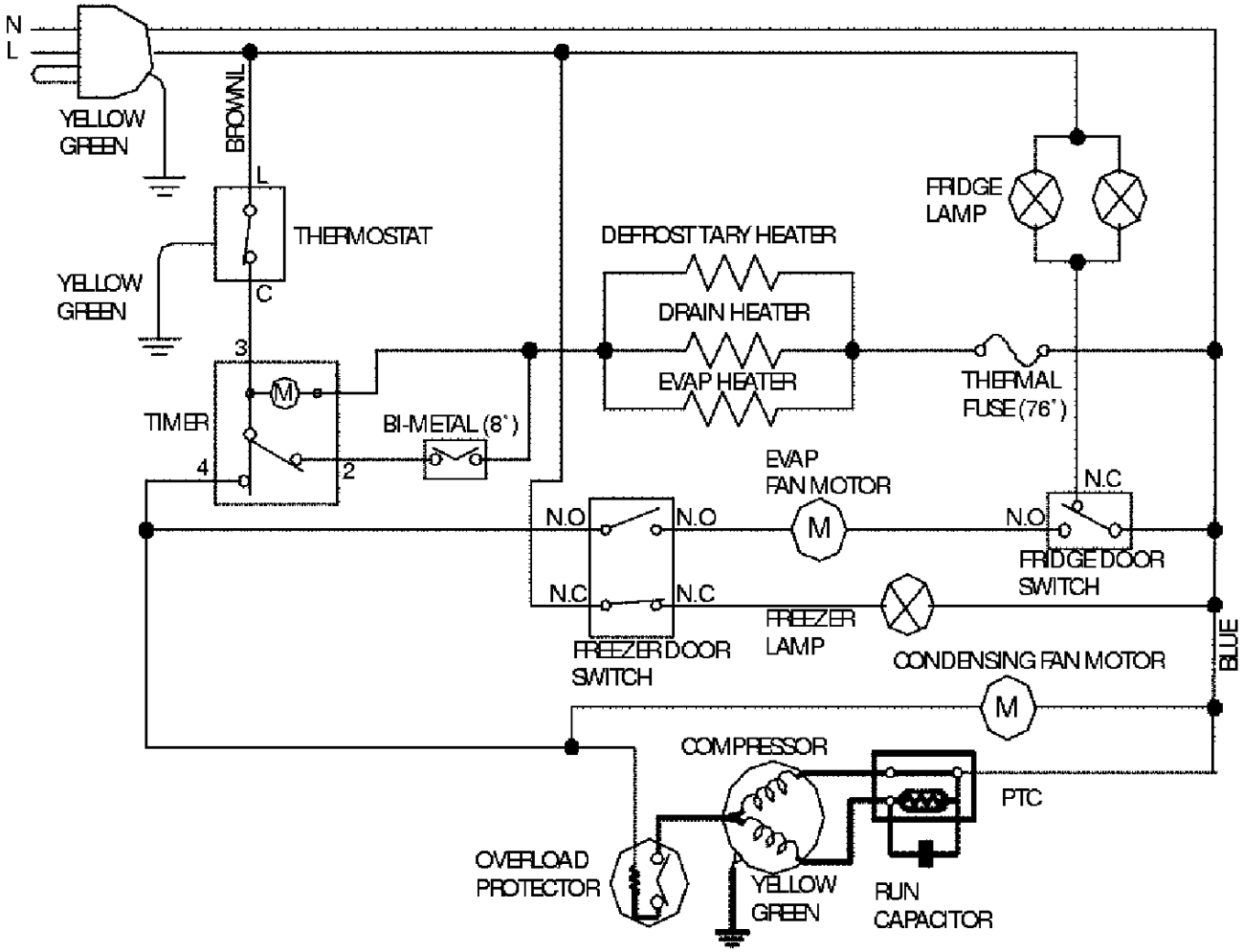
N
L
YELLOW GREEN
BROWN/L
L
THERMOSTAT
C
YELLOW GREEN
3
TIMER
M
4
2
BI-METAL (8°)
DEFROST TARY HEATER
DRAIN HEATER
EVAP HEATER
FRIDGE LAMP
THERMAL FUSE (76°)
EVAP FAN MOTOR
N.C
N.O
N.O
M
N.O
FRIDGE DOOR SWITCH
N.C
N.C
FREEZER LAMP
FREEZER DOOR SWITCH
CONDENSING FAN MOTOR
BLUE
M
COMPRESSOR
PTC
OVERLOAD PROTECTOR
YELLOW GREEN
RUN CAPACITOR

**DOUBLE FROID**
**DZN4210S**
**DZN4210S/1**
**10615728**

**Brandt**
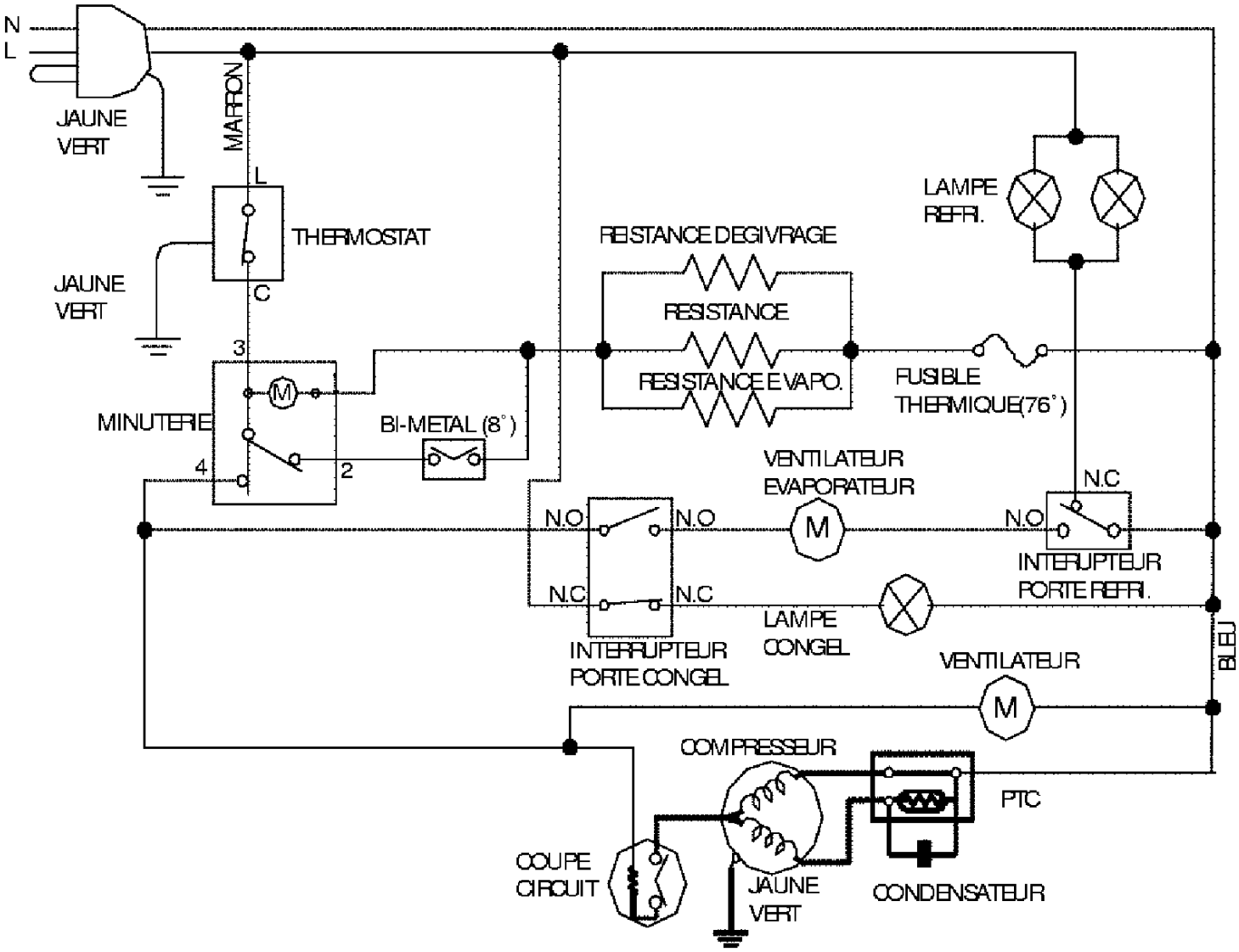
**NOTICE TECHNIQUE**