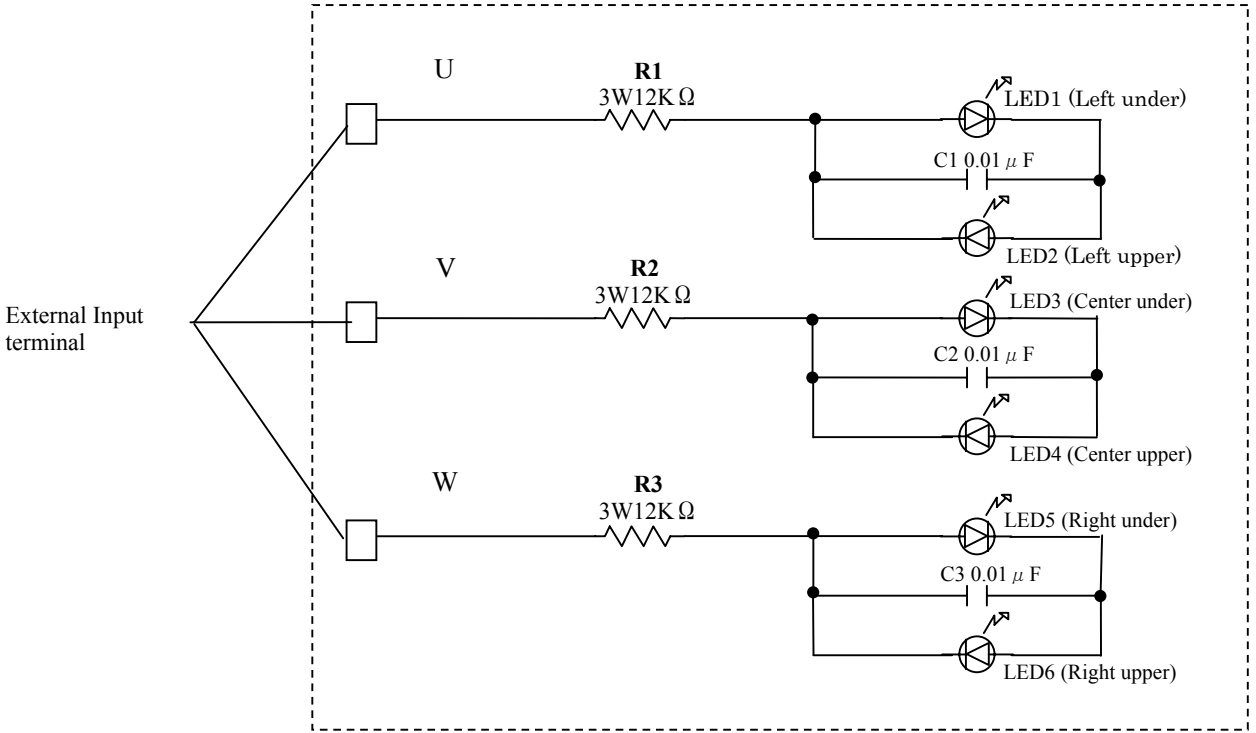

Fig.3 Internal Circuit of the Inverter Analyzer