CHAPTER 6 WIRING DIAGRAM
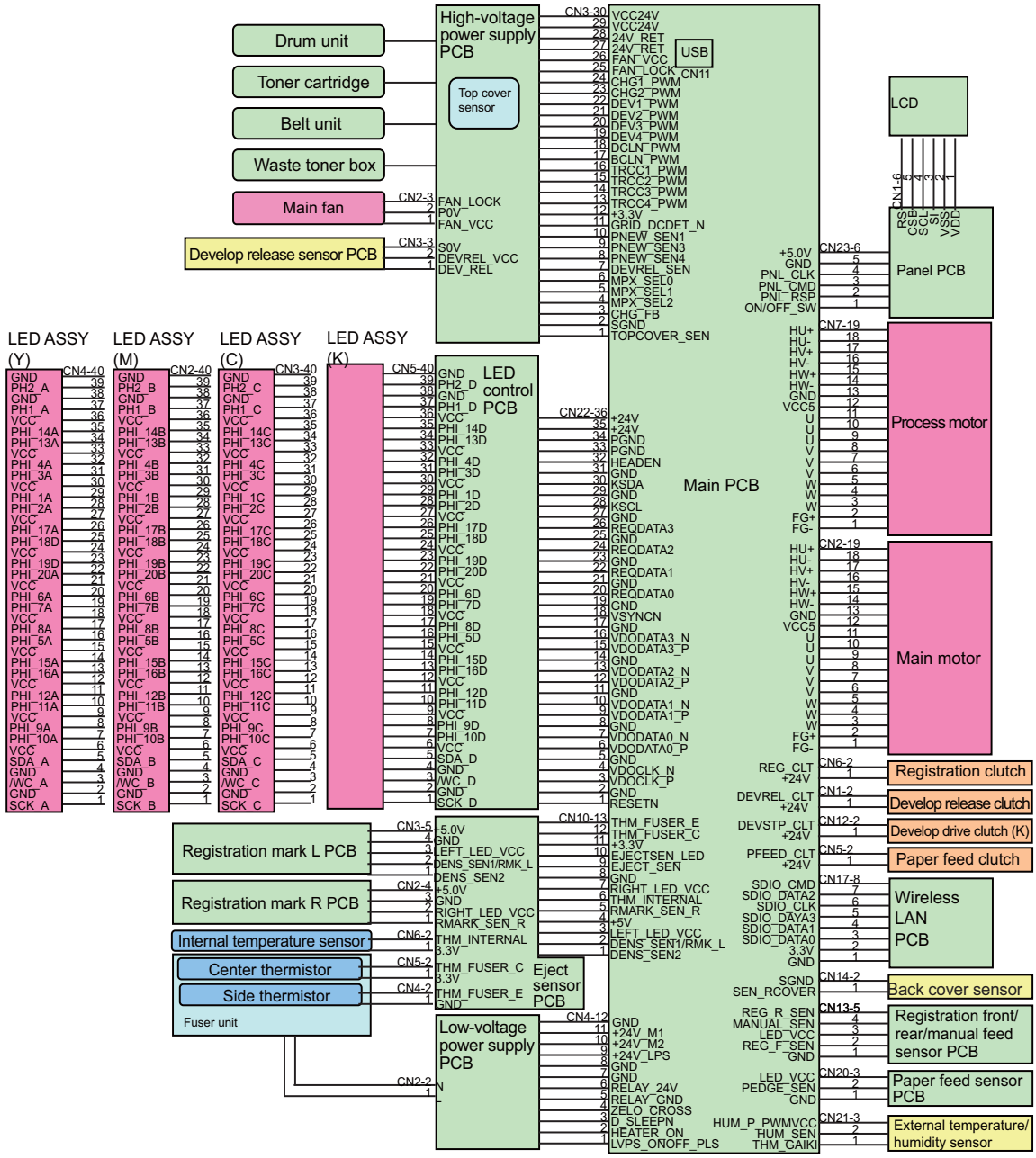
1. WIRING DIAGRAM