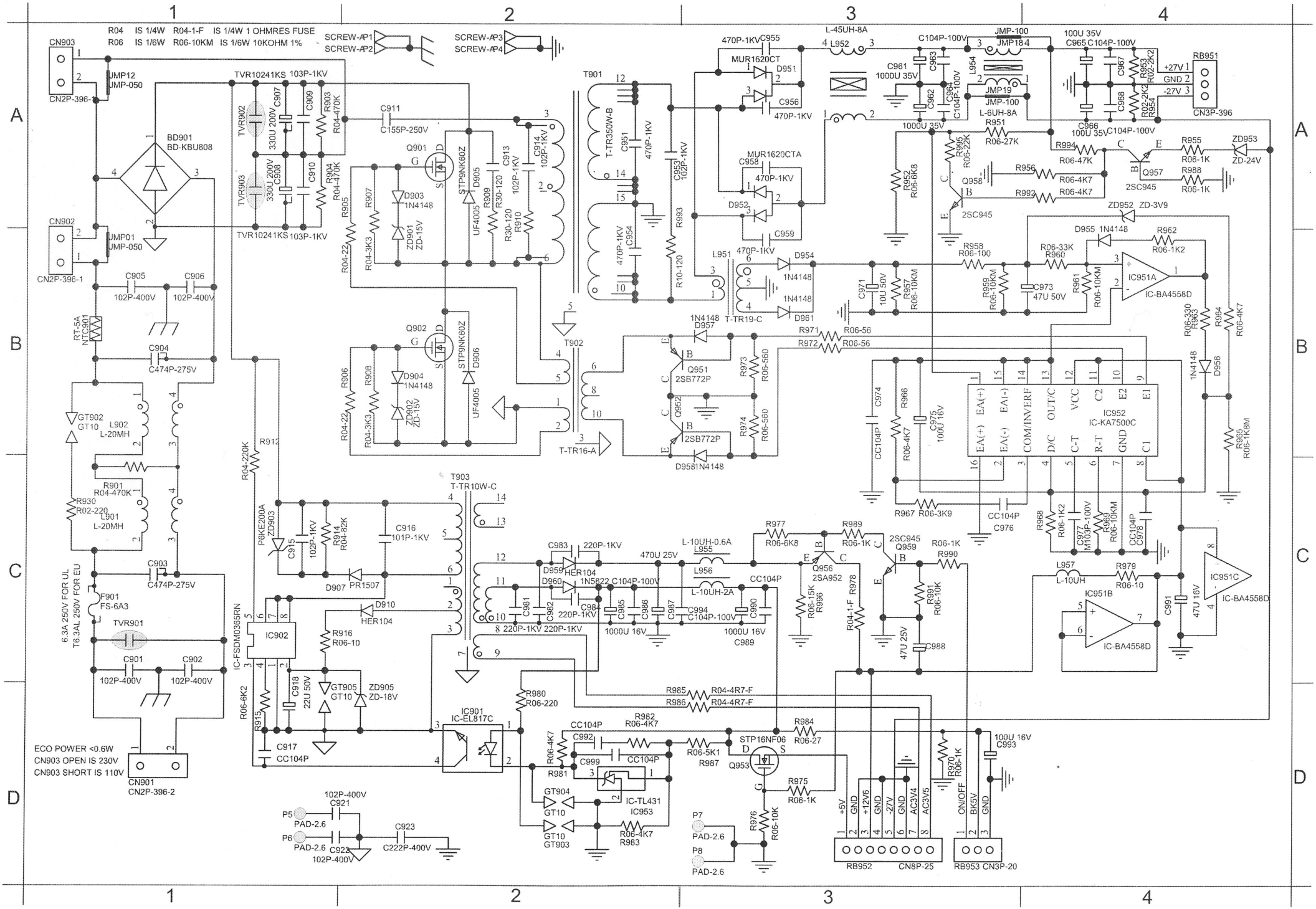
R04 IS 1/4W R04-1-F IS 1/4W 1 OHMRES FUSE
R06 IS 1/6W R06-10KM IS 1/6W 10KOHM 1%
ECO POWER <0.6W
CN903 OPEN IS 230V
CN903 SHORT IS 110V
6.3A 250V FOR UL
T6.3AL 250V FOR EU
IC-FSDM0365RN
IC-EL817C
IC-TL431
IC-BA4558D
IC-KA7500C
STP16NF06
STP9NK60Z
MUR1620CT
MUR1620CTA
T-TR350W-B
T-TR19-C
T-TR16-A
T-TR10W-C
2SC945
2SB772P
2SA952
L-45UH-8A
L-6UH-8A
L-10UH-0.6A
L-10UH-2A
L-10UH
L-20MH
TVR10241KS
BD-KBU808
RT-5A
NTC901
CN903
CN902
CN2P-396
CN2P-396-1
CN2P-396-2
CN901
CN3P-396
RB951
RB952
CN8P-25
RB953
CN3P-20
+27V
GND
-27V
+5V
+12V6
AC3V4
AC3V5
ON/OFF
BK5V
PAD-2.6