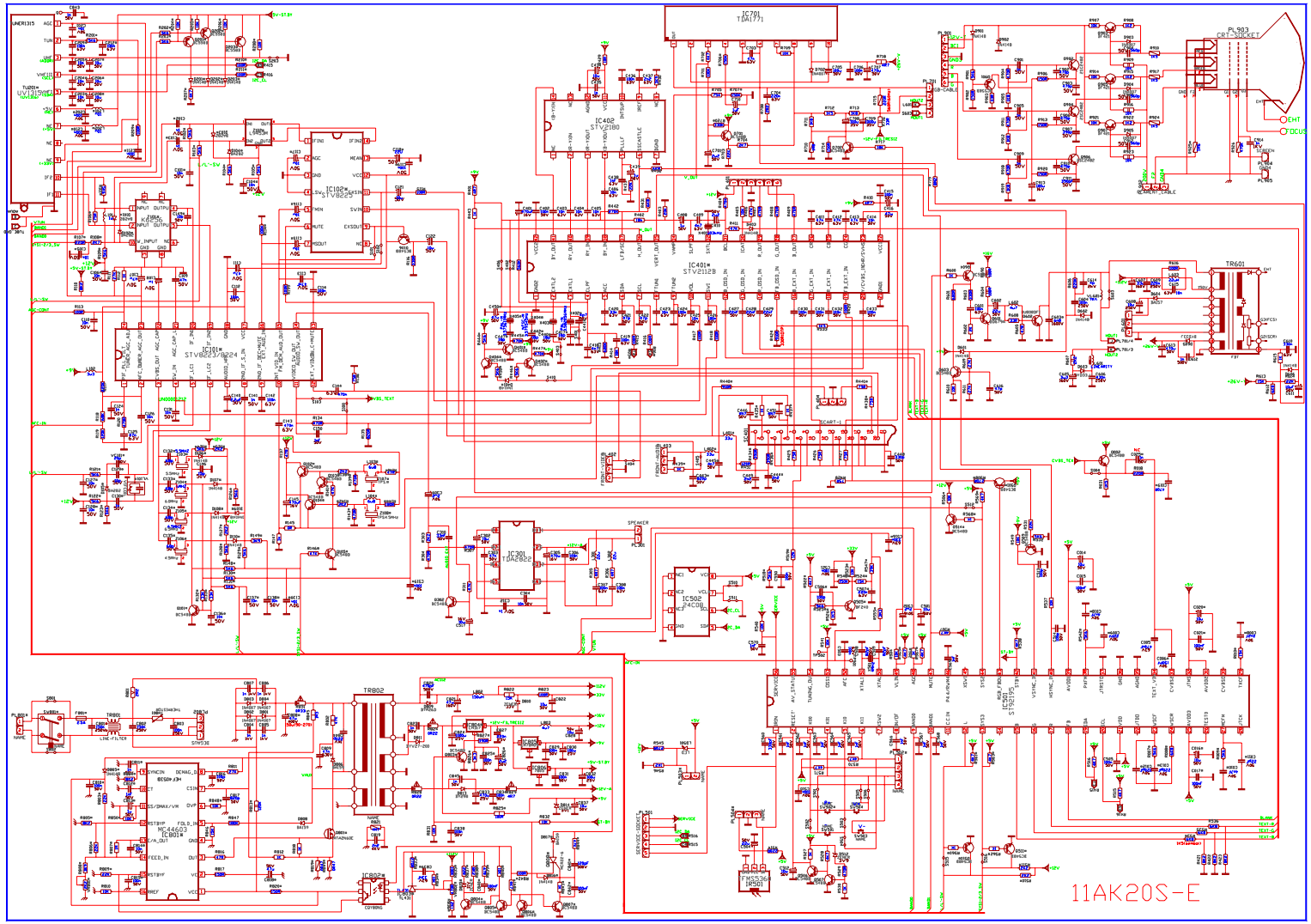
IC701
TDA1771
IC402
STV2180
IC102
STV8225
IC401
STV2112B
IC101
STV8223/8224
IC301
TDA2822
IC502
24C08
IC505
STV8195
TR601
TR802
PL903
CRT-SOCKET
11AK20S-E