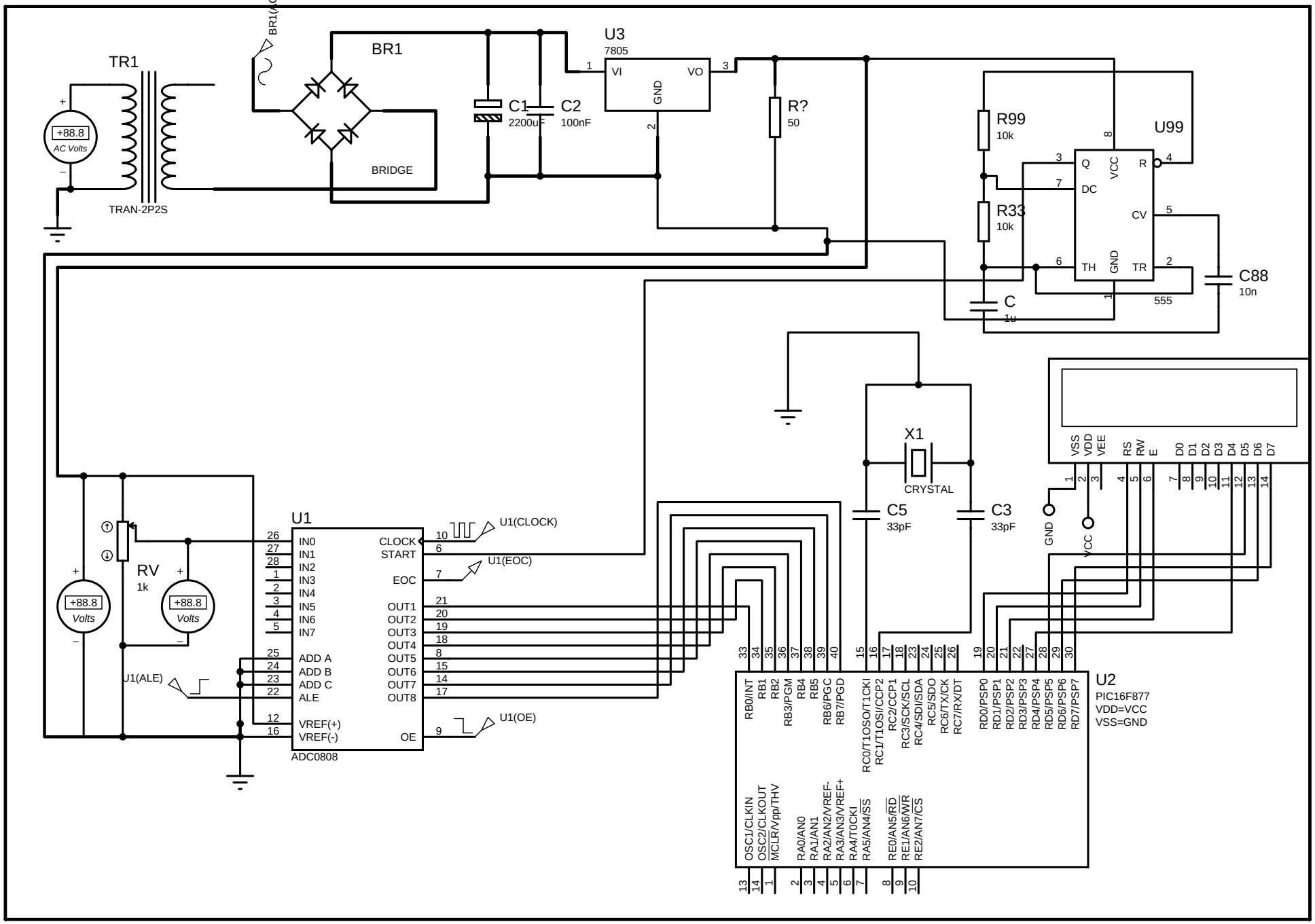
TR1
TRAN-2P2S
+88.8
AC Volts
BR1(AC)
BR1
BRIDGE
C1
2200uF
C2
100nF
U3
7805
VI
VO
GND
R?
50
R99
10k
R33
10k
U99
555
Q
DC
VCC
R
CV
TH
GND
TR
C88
10n
C
1u
X1
CRYSTAL
C5
33pF
C3
33pF
VSS
VDD
VEE
RS
RW
E
D0
D1
D2
D3
D4
D5
D6
D7
GND
VCC
U1
ADC0808
IN0
IN1
IN2
IN3
IN4
IN5
IN6
IN7
ADD A
ADD B
ADD C
ALE
VREF(+)
VREF(-)
CLOCK
START
EOC
OUT1
OUT2
OUT3
OUT4
OUT5
OUT6
OUT7
OUT8
OE
U1(CLOCK)
U1(EOC)
U1(OE)
U1(ALE)
RV
1k
+88.8
Volts
U2
PIC16F877
VDD=VCC
VSS=GND
RB0/INT
RB1
RB2
RB3/PGM
RB4
RB5
RB6/PGC
RB7/PGD
RC0/T1OSO/T1CKI
RC1/T1OSI/CCP2
RC2/CCP1
RC3/SCK/SCL
RC4/SDI/SDA
RC5/SDO
RC6/TX/CK
RC7/RX/DT
RD0/PSP0
RD1/PSP1
RD2/PSP2
RD3/PSP3
RD4/PSP4
RD5/PSP5
RD6/PSP6
RD7/PSP7
OSC1/CLKIN
OSC2/CLKOUT
MCLR/Vpp/THV
RA0/AN0
RA1/AN1
RA2/AN2/VREF-
RA3/AN3/VREF+
RA4/T0CKI
RA5/AN4/SS
RE0/AN5/RD
RE1/AN6/WR
RE2/AN7/CS