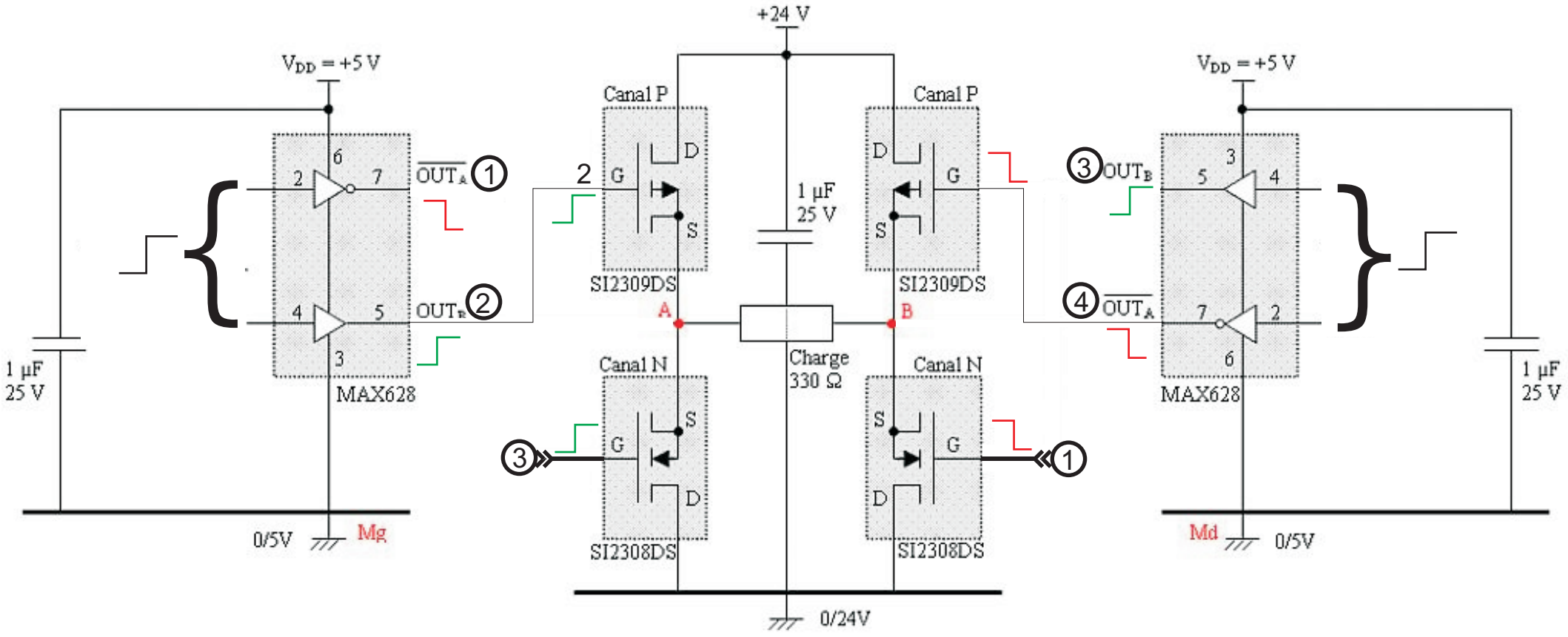
+24 V
VDD = +5 V
VDD = +5 V
Canal P
Canal P
Canal N
Canal N
SI2309DS
SI2309DS
SI2308DS
SI2308DS
MAX628
MAX628
1 µF
25 V
1 µF
25 V
1 µF
25 V
Charge
330 Ω
OUTA
OUTB
OUTA
OUTB
A
B
Mg
Md
0/5V
0/5V
0/24V