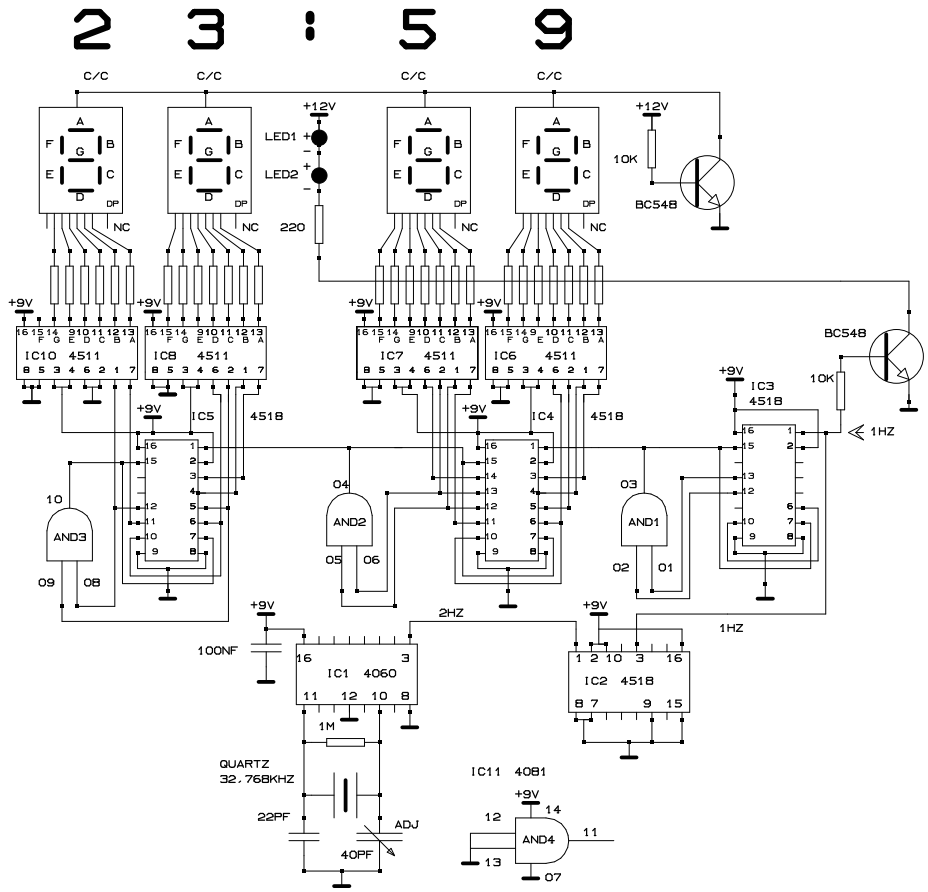
2 3 : 5 9
C/C
C/C
C/C
C/C
+12V
LED1
LED2
220
+12V
10K
BC548
NC
+9V
IC10 4511
IC8 4511
IC7 4511
IC6 4511
BC548
10K
IC3
4518
1HZ
IC5
4518
IC4
4518
10
AND3
09
08
04
AND2
05
06
03
AND1
02
01
2HZ
1HZ
100NF
IC1 4060
IC2 4518
1M
QUARTZ
32.768KHZ
22PF
ADJ
40PF
IC11 4081
AND4
12
13
14
11
07