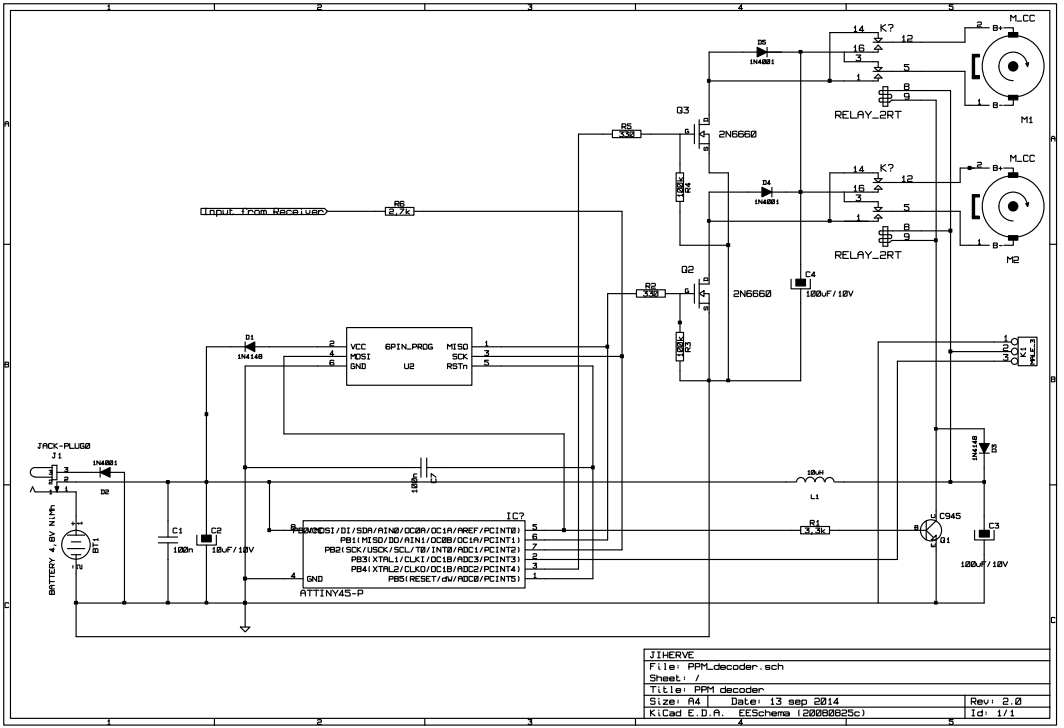

JIHERVE		
File: PPM_decoder.sch		
Sheet: /		
Title: PPM decoder		
Size: A4	Date: 13 sep 2014	Rev: 2.0
KiCad E.D.A.	EESchema (20080825c)	Id: 1/1