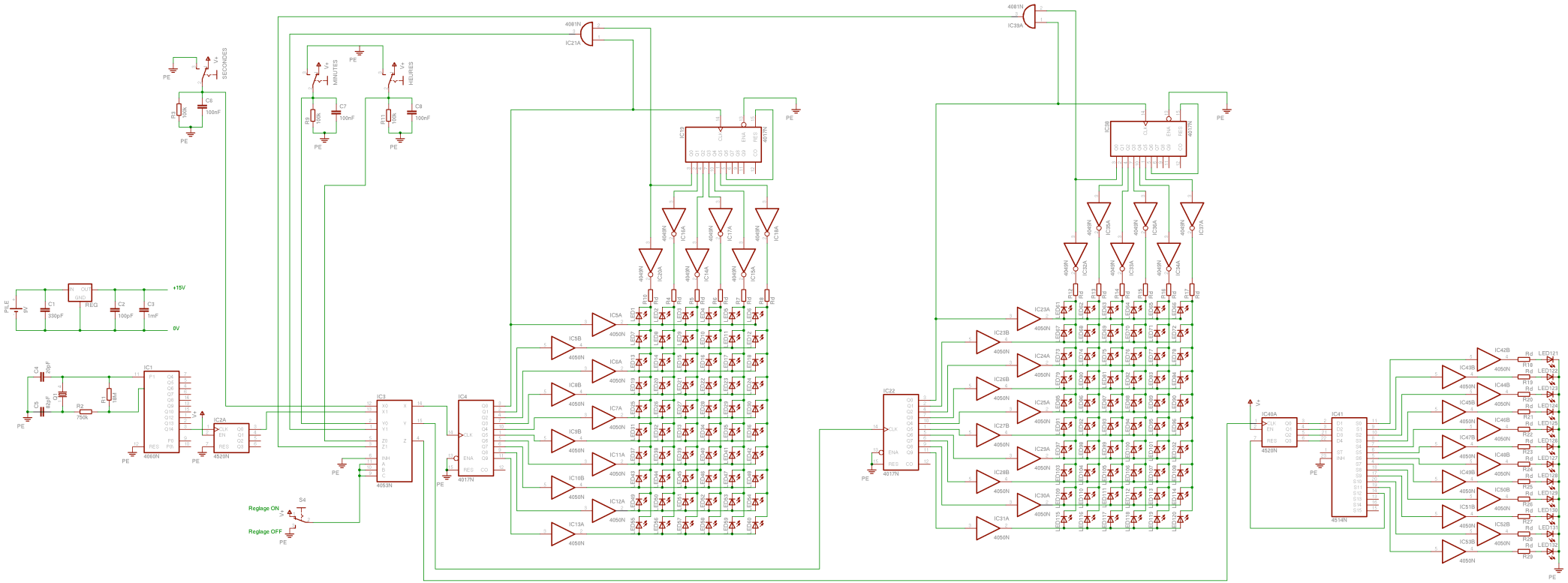
SECONDES
MINUTES
HEURES
Reglage ON
Reglage OFF
+15V
0V
PE