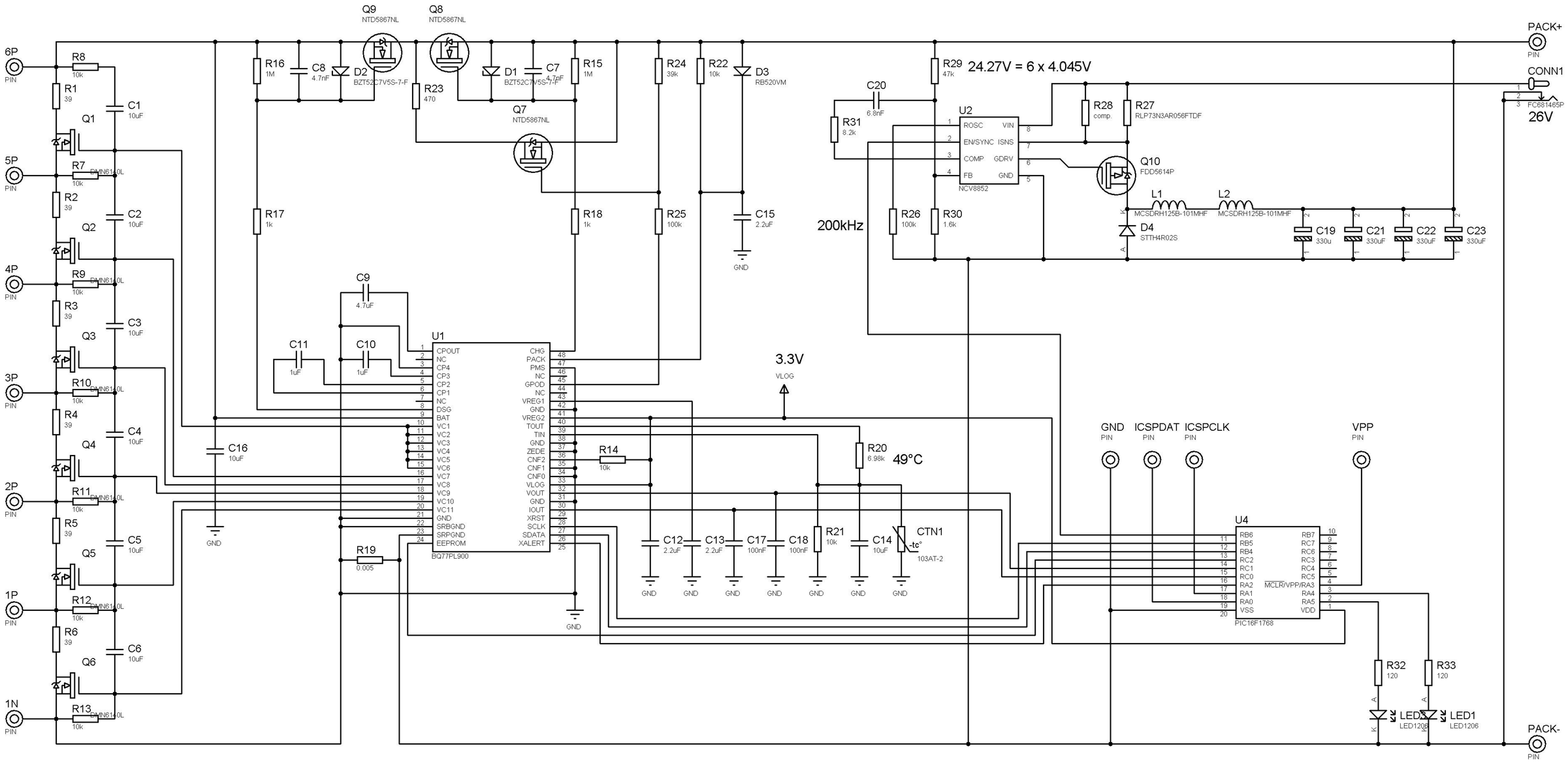
6P
5P
4P
3P
2P
1P
1N
PIN
R1 39
R2 39
R3 39
R4 39
R5 39
R6 39
R7 10k
R8 10k
R9 10k
R10 10k
R11 10k
R12 10k
R13 10k
DMN6140L
Q1
Q2
Q3
Q4
Q5
Q6
C1 10uF
C2 10uF
C3 10uF
C4 10uF
C5 10uF
C6 10uF
C16 10uF
GND
Q9 NTD5867NL
Q8 NTD5867NL
Q7 NTD5867NL
R16 1M
C8 4.7nF
D2 BZT52C7V5S-7-F
R23 470
D1 BZT52C7V5S-7-F
C7 4.7nF
R15 1M
R17 1k
R18 1k
R24 39k
R22 10k
D3 RB520VM
R25 100k
C15 2.2uF
C9 4.7uF
C11 1uF
C10 1uF
U1
BQ77PL900
CPOUT
NC
CP4
CP3
CP2
CP1
DSG
BAT
VC1
VC2
VC3
VC4
VC5
VC6
VC7
VC8
VC9
VC10
VC11
SRBGND
SRPGND
EEPROM
CHG
PACK
PMS
GPOD
TOUT
TIN
ZEDE
CNF2
CNF1
CNF0
VLOG
VOUT
XRST
SCLK
SDATA
XALERT
R19 0.005
R14 10k
3.3V
VLOG
R20 6.98k
49°C
C12 2.2uF
C13 2.2uF
C17 100nF
C18 100nF
R21 10k
C14 10uF
CTN1
-tc°
103AT-2
R29 47k
24.27V = 6 x 4.045V
C20 6.8nF
R31 8.2k
U2
NCV8852
ROSC
EN/SYNC
COMP
FB
VIN
ISNS
GDRV
GND
R28 comp.
R27 RLP73N3AR056FTDF
Q10 FDD5614P
200kHz
R26 100k
R30 1.6k
L1 MCSDRH125B-101MHF
L2 MCSDRH125B-101MHF
D4 STTH4R02S
C19 330u
C21 330uF
C22 330uF
C23 330uF
PACK+
CONN1
FC681465P
26V
PACK-
GND
ICSPDAT
ICSPCLK
VPP
U4
PIC16F1768
RB6
RB5
RB4
RC2
RC1
RC0
RA2
RA1
RA0
VSS
RB7
RC7
RC6
RC3
RC4
RC5
MCLR/VPP/RA3
RA4
RA5
VDD
R32 120
R33 120
LED2 LED1206
LED1 LED1206