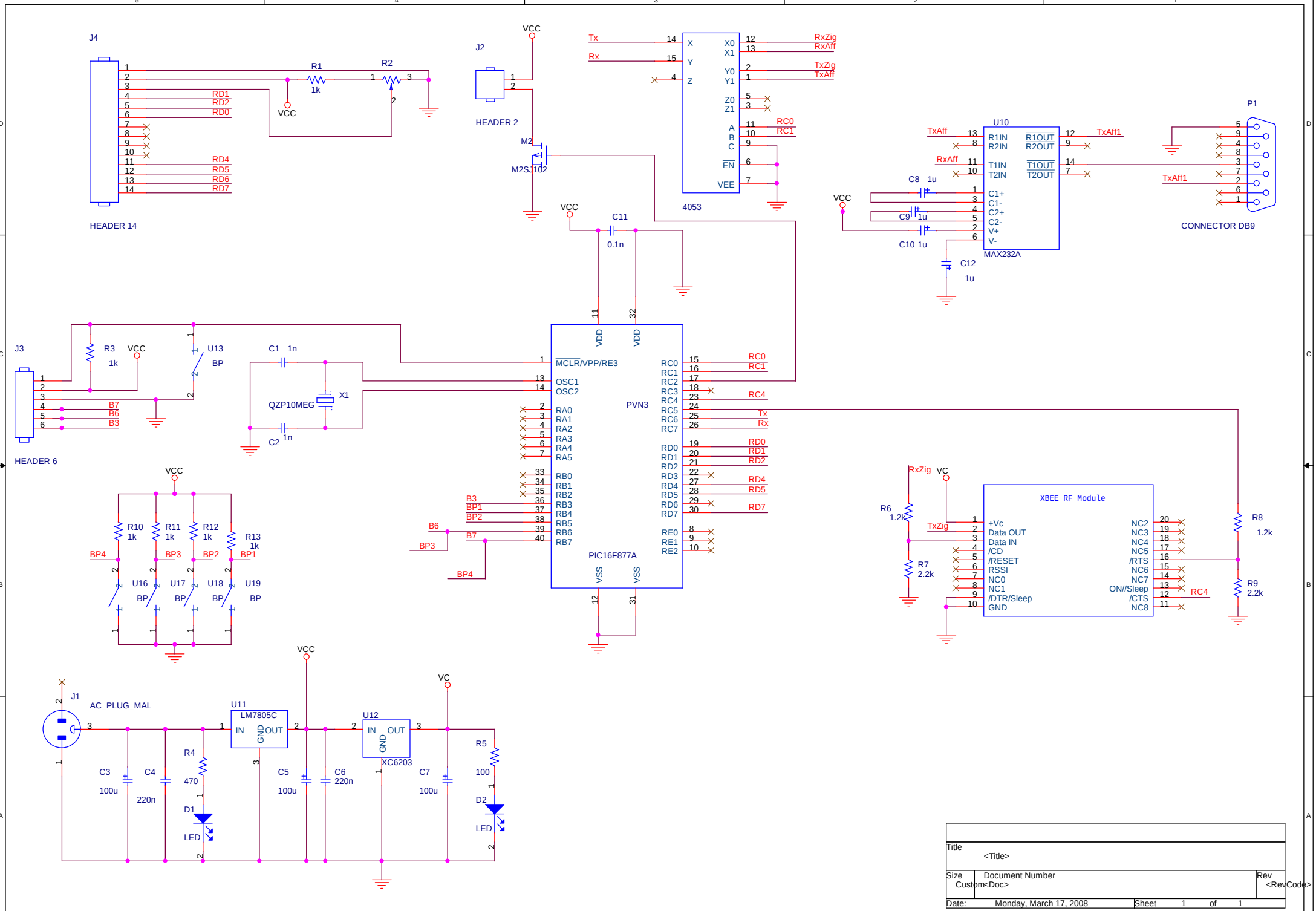
J4
HEADER 14
R1
1k
R2
VCC
RD1
RD2
RD0
RD4
RD5
RD6
RD7
J2
HEADER 2
M2
M2SJ102
Tx
Rx
4053
RxZig
RxAff
TxZig
TxAff
RC0
RC1
U10
MAX232A
R1IN
R2IN
T1IN
T2IN
R1OUT
R2OUT
T1OUT
T2OUT
TxAff1
C8 1u
C9 1u
C10 1u
C12 1u
P1
CONNECTOR DB9
C11
0.1n
J3
HEADER 6
R3
1k
U13
BP
B7
B6
B3
C1 1n
C2 1n
QZP10MEG
X1
PVN3
PIC16F877A
MCLR/VPP/RE3
OSC1
OSC2
VDD
VSS
BP1
BP2
BP3
BP4
R10 1k
R11 1k
R12 1k
R13 1k
U16
U17
U18
U19
R6 1.2k
R7 2.2k
R8 1.2k
R9 2.2k
XBEE RF Module
+Vc
Data OUT
Data IN
/CD
/RESET
RSSI
NC0
NC1
/DTR/Sleep
GND
NC2
NC3
NC4
NC5
/RTS
NC6
NC7
ON//Sleep
/CTS
NC8
J1
AC_PLUG_MAL
U11
LM7805C
IN
OUT
GND
U12
XC6203
C3 100u
C4 220n
R4 470
D1
LED
C5 100u
C6 220n
C7 100u
R5 100
D2
Title
<Title>
Size
Custom
Document Number
<Doc>
Rev
<RevCode>
Date: Monday, March 17, 2008
Sheet 1 of 1