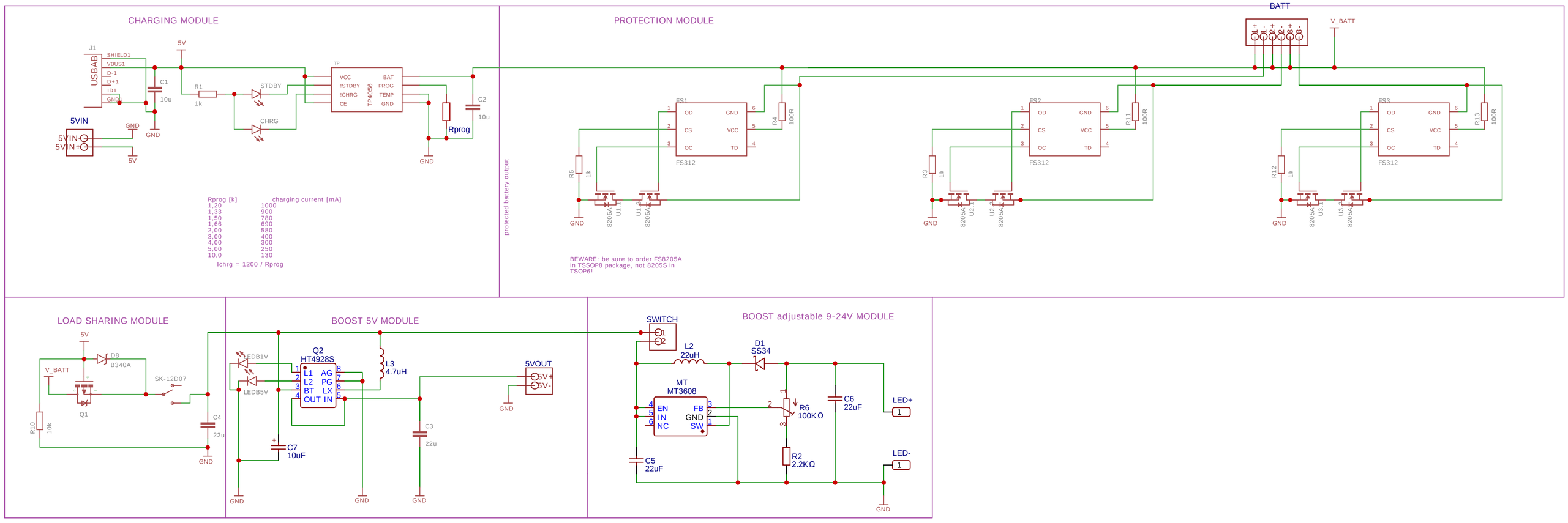

all resistors are 1% 0,25 W in 1206 package unlesss otherwise noted