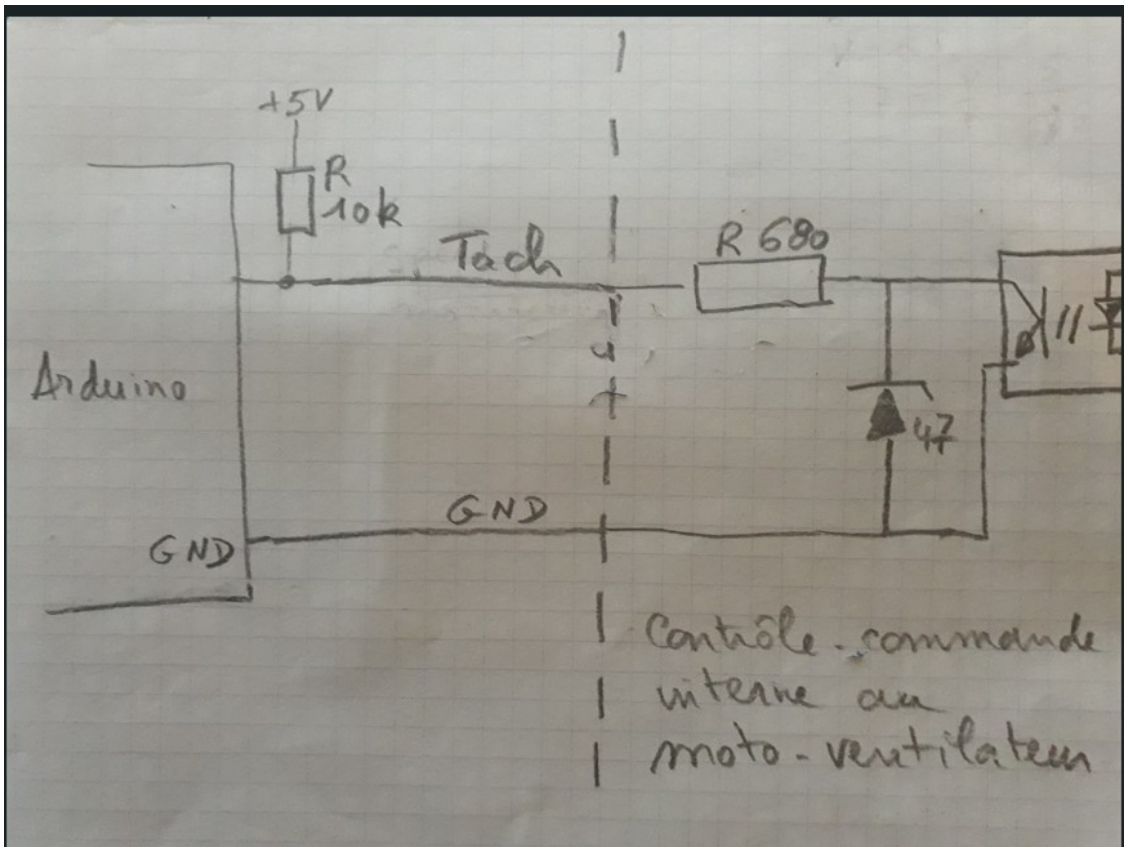
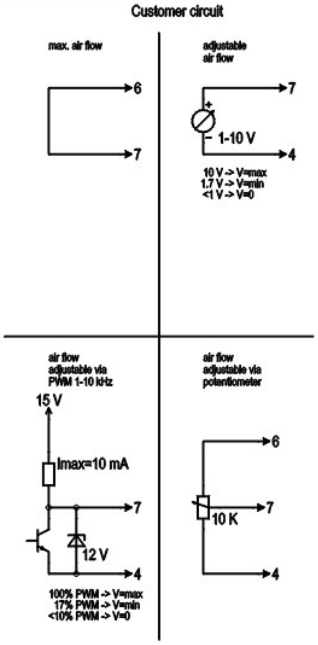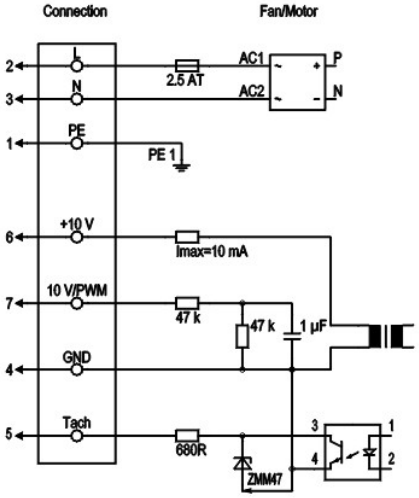
4.4 Connection diagram