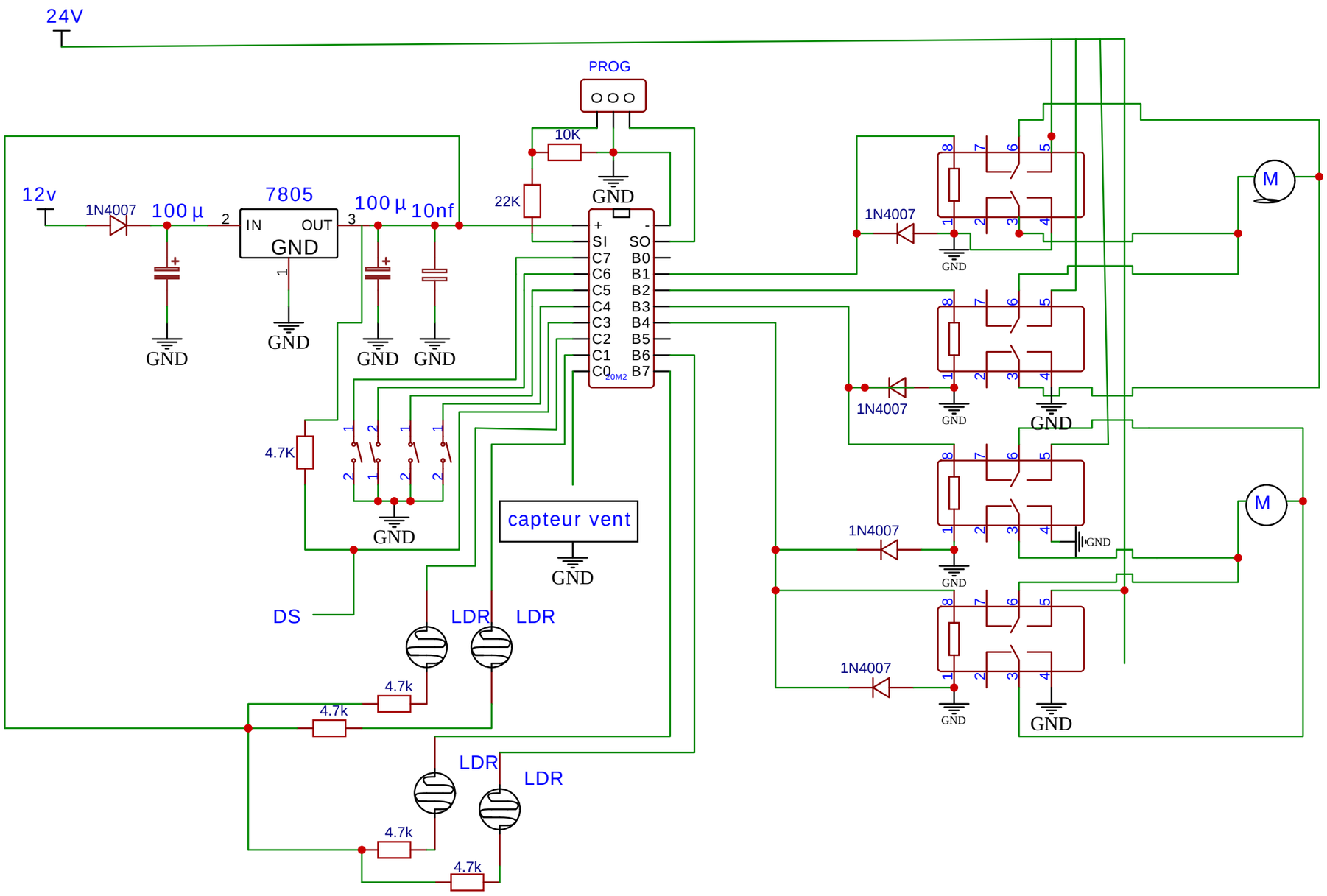


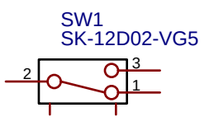


| | |
|---|---|
| TITLE: Sheet_1 | REV: 1.0 |
| EasyEDA Company: Your Company | Sheet: 1/1 |
| Date: 2026-02-16 Drawn By: patrick63730 | |