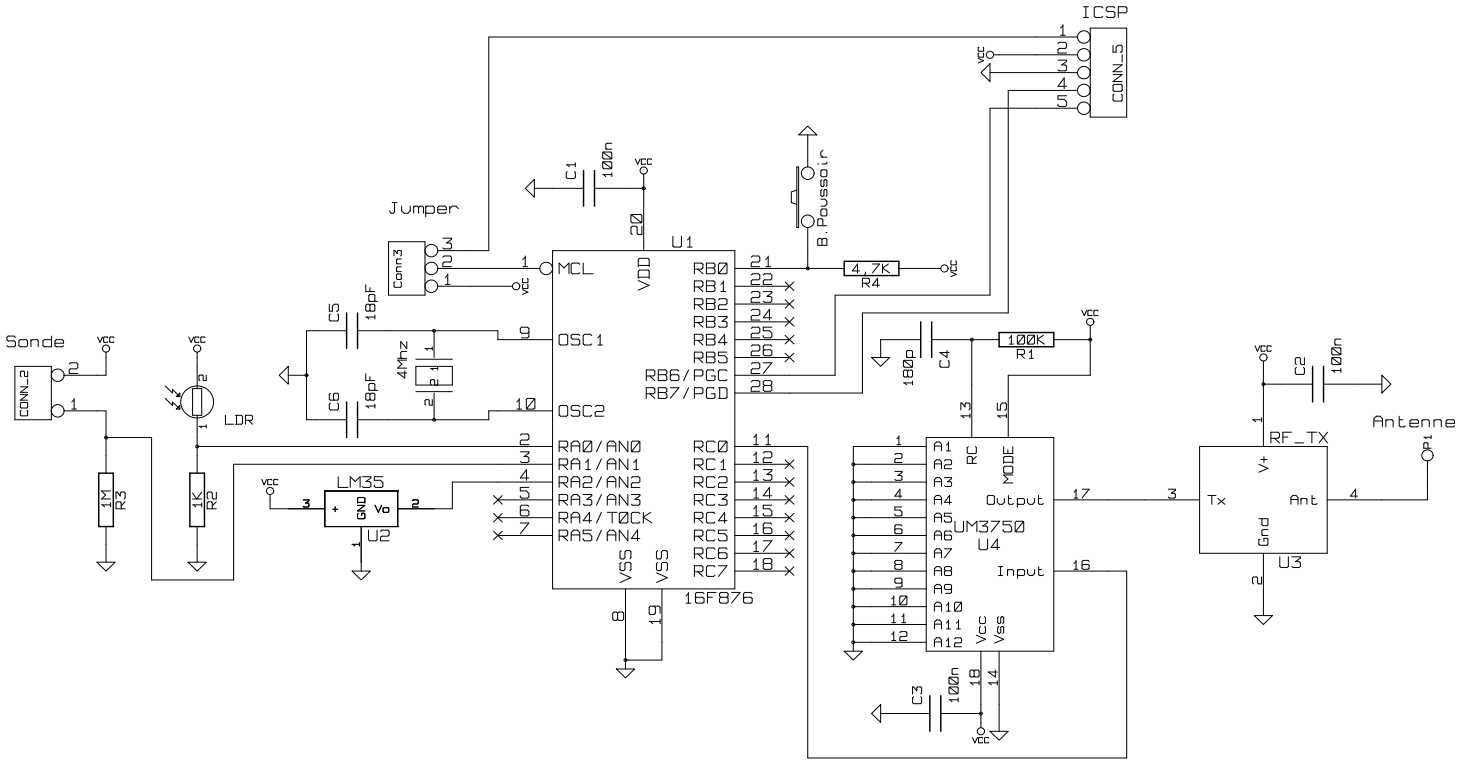

GAABAB Amine		
Title: Sonde Meteo		
Size: A4	Date: 25 jul 2008	Rev: 1
KiCad E.D.A.		Sheet: 1/1