K9F8G08UXM

INFORMATION IN THIS DOCUMENT IS PROVIDED IN RELATION TO SAMSUNG PRODUCTS, AND IS SUBJECT TO CHANGE WITHOUT NOTICE.

NOTHING IN THIS DOCUMENT SHALL BE CONSTRUED AS GRANTING ANY LICENSE, EXPRESS OR IMPLIED, BY ESTOPPEL OR OTHERWISE,

TO ANY INTELLECTUAL PROPERTY RIGHTS IN SAMSUNG PRODUCTS OR TECHNOLOGY. ALL INFORMATION IN THIS DOCUMENT IS PROVIDED

ON AS "AS IS" BASIS WITHOUT GUARANTEE OR WARRANTY OF ANY KIND.

1. For updates or additional information about Samsung products, contact your nearest Samsung office.

2. Samsung products are not intended for use in life support, critical care, medical, safety equipment, or similar applications where Product failure could result in loss of life or personal or physical harm, or any military or defense application, or any governmental procurement to which special terms or provisions may apply.

* Samsung Electronics reserves the right to change products or specification without notice.

Document Title

1G x 8 Bit/ 2G x 8 Bit NAND Flash Memory

Revision History

Revision No	History	Draft Date	Remark
0.0	1. Initial issue	Sep.26th 2006	Advance
0.1	1. tCSD timing is added (min.10ns)	Dec. 8th 2006	Advance
0.2	1. Add random data output after Read for copy 2. Add read for copy-back with data output timing guide 3. Modify 2-plane copy-back program operation 4. Modify 2KB program operation timing guide 5. Wafer level capacitance is added.	Feb. 15nd 2007	Preliminary
1.0	1. MONO/DDP LGA package is added. 2. tCSD is changed.(10ns -> 0ns)	Mar. 31st 2007	Final

The attached data sheets are prepared and approved by SAMSUNG Electronics. SAMSUNG Electronics CO., LTD. reserve the right to change the specifications. SAMSUNG Electronics will evaluate and reply to your requests and questions about device. If you have any questions, please contact the SAMSUNG branch office near your office.

1G x 8 Bit/ 2G x 8 Bit NAND Flash Memory

PRODUCT LIST

Part Number	Vcc Range	Organization	PKG Type
K9F8G08B0M-P	2.5V ~ 2.9V	x8	TSOP1
K9F8G08U0M-P	2.7V ~ 3.6V		
K9F8G08U0M-I			52ULGA
K9KAG08U1M-I			

FEATURES

- Voltage Supply
  - 2.7V Device(K9F8G08B0M) : 2.5V ~ 2.9V
  - 3.3V Device(K9F8G08U0M) : 2.7V ~ 3.6V
- Organization
  - Memory Cell Array : (1G + 32M) x 8bit
  - Data Register : (4K + 128) x 8bit
- Automatic Program and Erase
  - Page Program : (4K + 128)Byte
  - Block Erase : (256K + 8K)Byte
- Page Read Operation
  - Page Size : (4K + 128)Byte
  - Random Read : 25μs(Max.)
  - Serial Access : 25ns(Min.)
- Fast Write Cycle Time
  - Page Program time : 200μs(Typ.)
  - Block Erase Time : 1.5ms(Typ.)
- Command/Address/Data Multiplexed I/O Port
- Hardware Data Protection
  - Program/Erase Lockout During Power Transitions
- Reliable CMOS Floating-Gate Technology
  - Endurance : 100K Program/Erase Cycles(with 1bit/512Byte ECC)
  - Data Retention : 10 Years
- Command Driven Operation
- Intelligent Copy-Back with internal 1bit/528Byte EDC
- Unique ID for Copyright Protection
- Package :
  - K9F8G08B0M-PCB0/PIB0
    48 - Pin TSOP1 (12 x 20 / 0.5 mm pitch)
  - K9F8G08U0M-PCB0/PIB0
    48 - Pin TSOP1 (12 x 20 / 0.5 mm pitch)
  - K9F8G08U0M-ICB0/IIB0
    52 - Pin ULGA (12 x 17 / 1.00 mm pitch)
  - K9KAG08U1M-ICB0/IIB0
    52 - Pin ULGA (12 x 17 / 1.00 mm pitch)

GENERAL DESCRIPTION

Offered in 1Gx8bit, the K9F8G08X0M is a 8G-bit NAND Flash Memory with spare 256M-bit. The device is offered in 2.7V and 3.3V Vcc. Its NAND cell provides the most cost-effective solution for the solid state application market. A program operation can be performed in typical 200μs on the (4K+128)Byte page and an erase operation can be performed in typical 1.5ms on a (256K+8K)Byte block. Data in the data register can be read out at 25ns cycle time per Byte. The I/O pins serve as the ports for address and data input/output as well as command input. The on-chip write controller automates all program and erase functions including pulse repetition, where required, and internal verification and margining of data. Even the write-intensive systems can take advantage of the K9F8G08X0M's extended reliability of 100K program/erase cycles by providing ECC(Error Correcting Code) with real time mapping-out algorithm. The K9F8G08X0M is an optimum solution for large nonvolatile storage applications such as solid state file storage and other portable applications requiring non-volatility.

PIN CONFIGURATION (TSOP1)

K9F8G08X0M-PCB0/PIB0

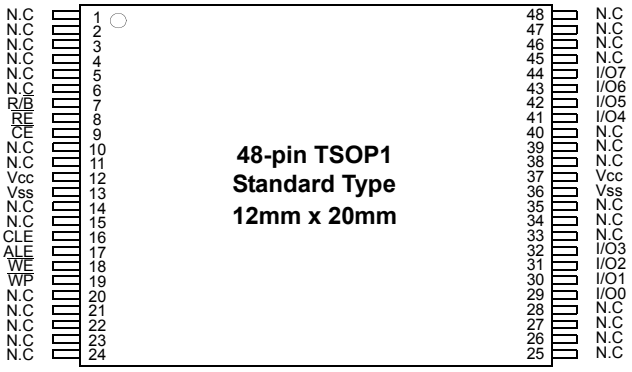

PACKAGE DIMENSIONS

48-PIN LEAD FREE PLASTIC THIN SMALL OUT-LINE PACKAGE TYPE(I)

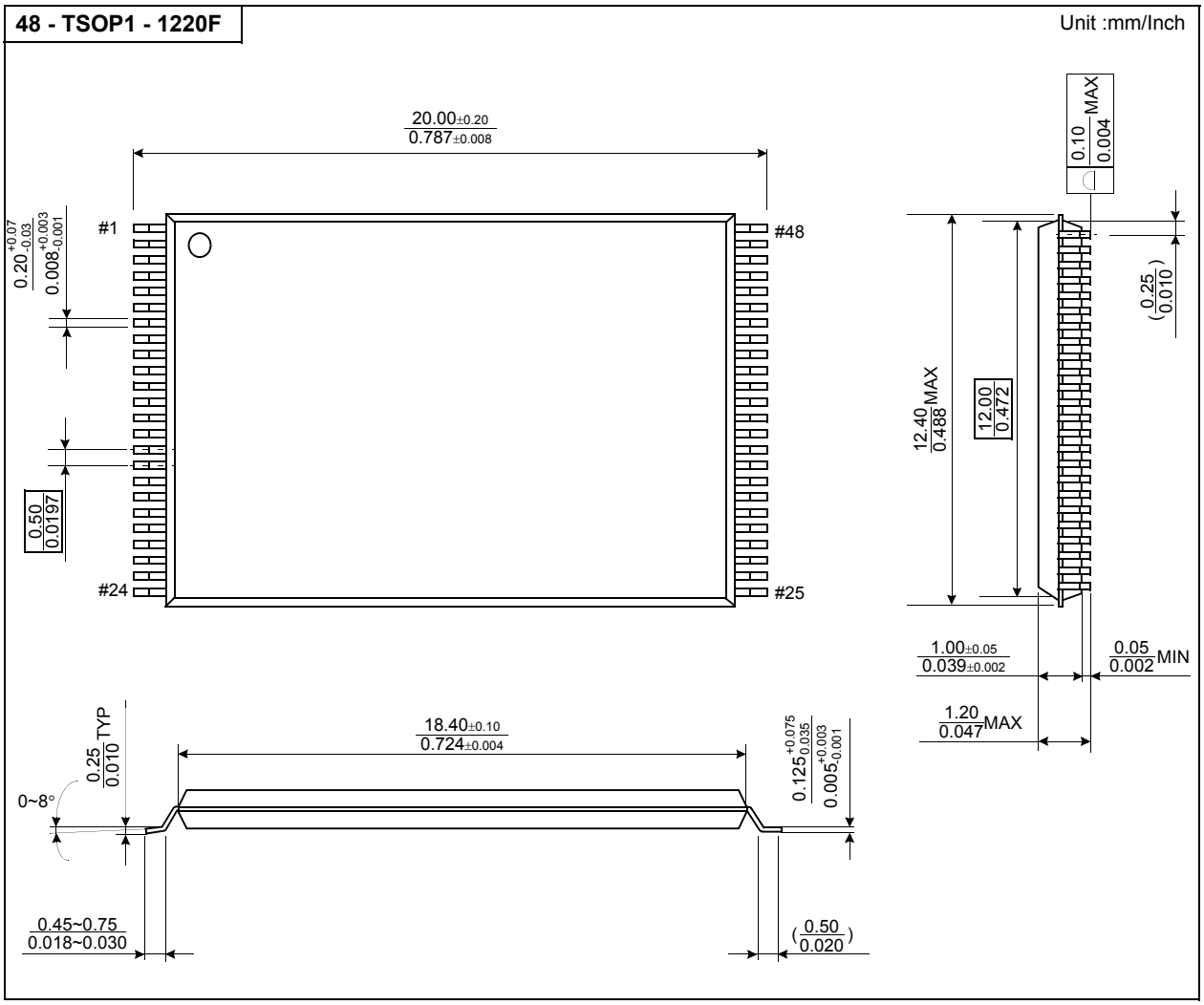

PIN CONFIGURATION (ULGA)

K9F8G08U0M-ICB0/IIB0

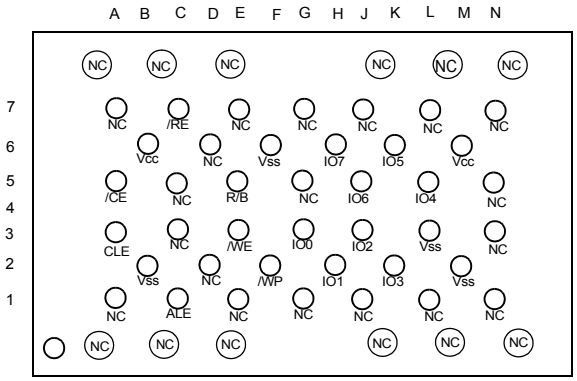

PACKAGE DIMENSIONS

52-ULGA (measured in millimeters)

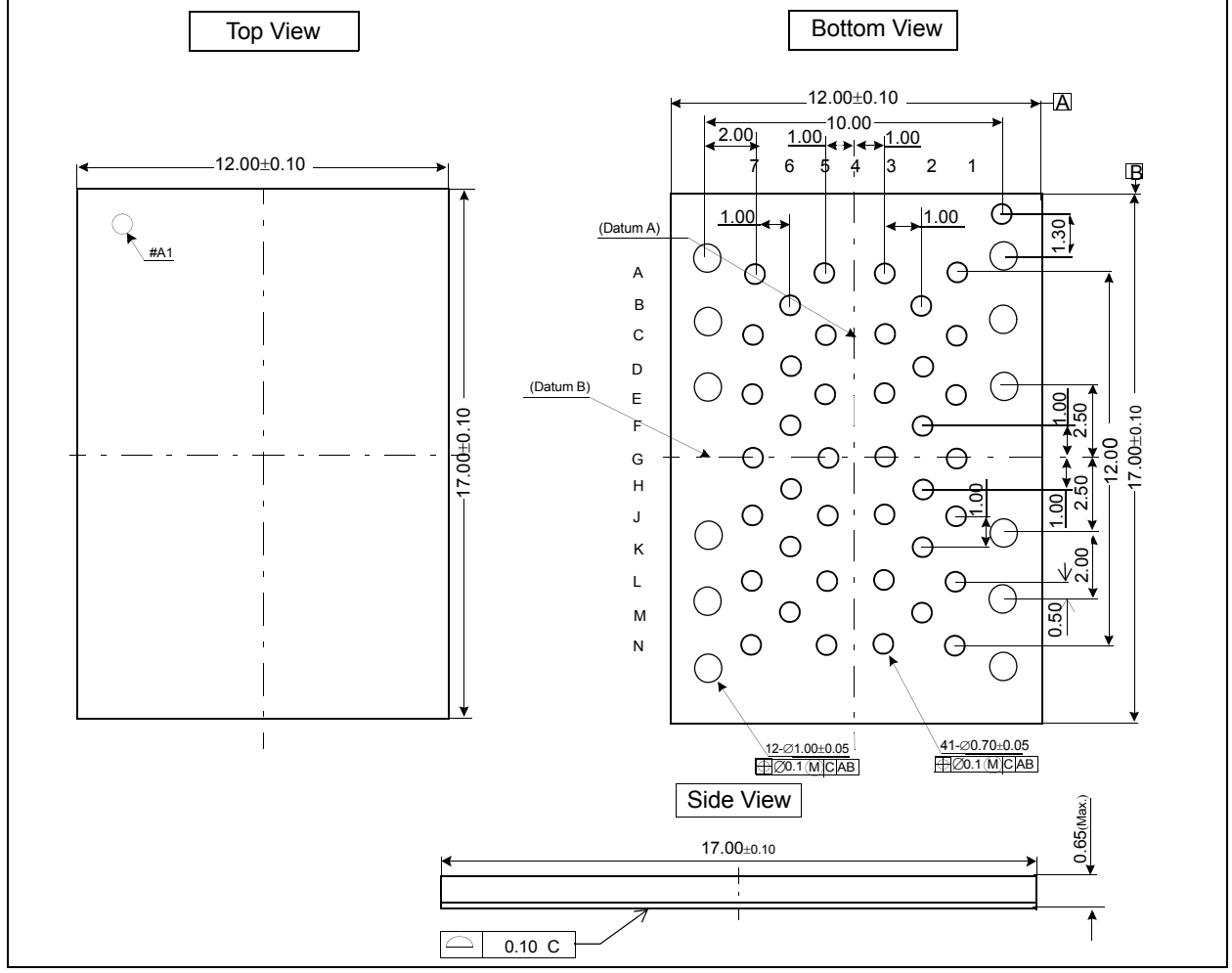

K9KAG08U1M-ICB0/IIB0

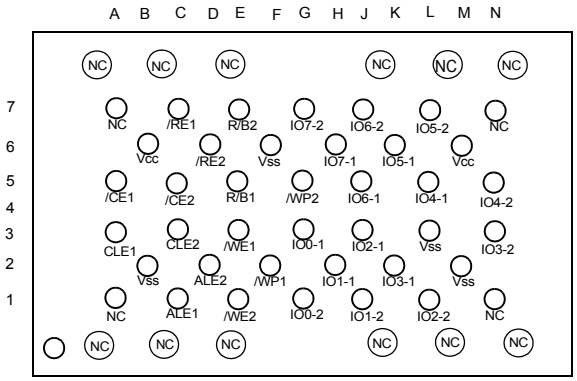

PACKAGE DIMENSIONS

52-ULGA (measured in millimeters)

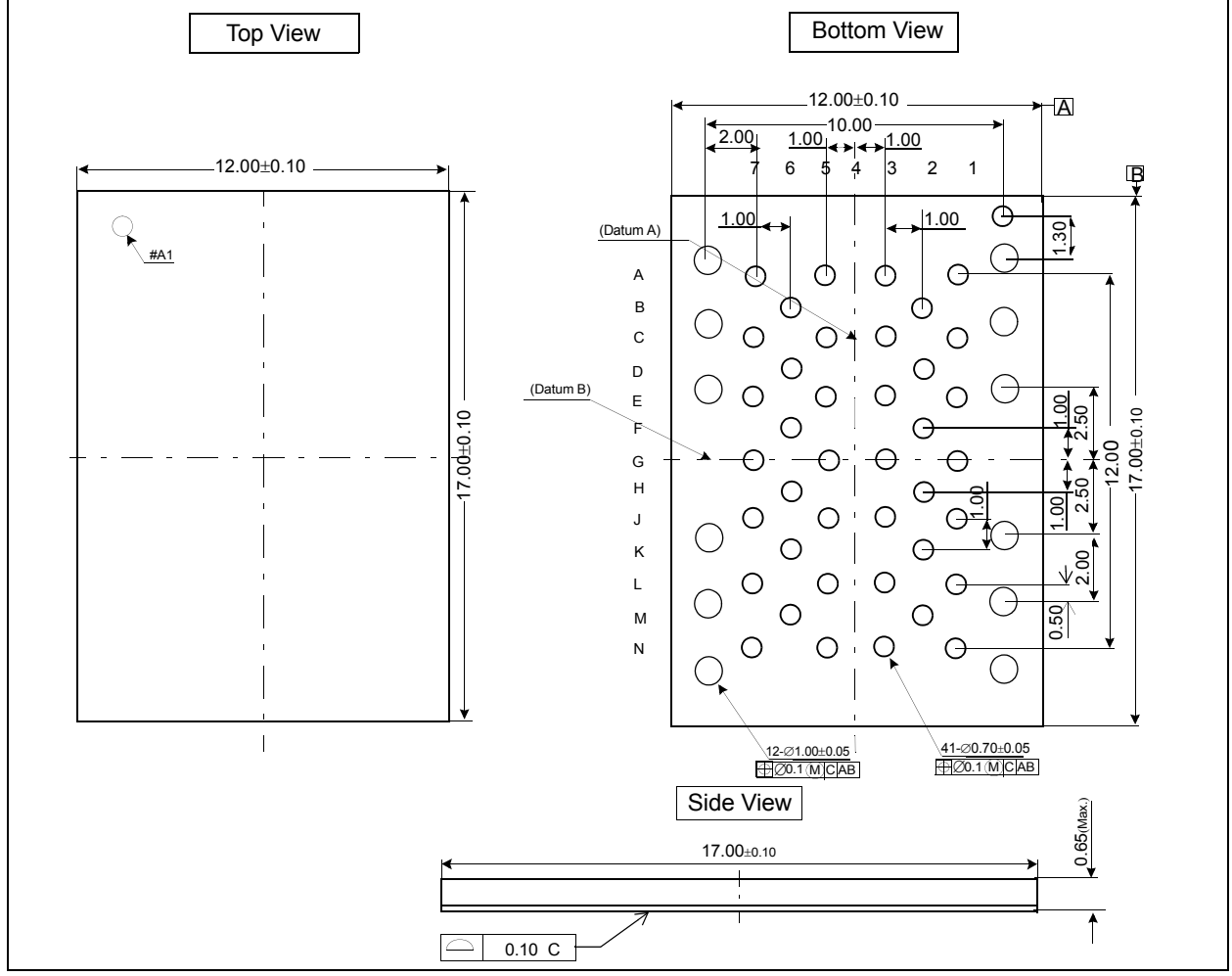

PIN DESCRIPTION

Pin Name	Pin Function
I/O_0 ~ I/O_7	**DATA INPUTS/OUTPUTS** The I/O pins are used to input command, address and data, and to output data during read operations. The I/O pins float to high-z when the chip is deselected or when the outputs are disabled.
CLE	**COMMAND LATCH ENABLE** The CLE input controls the activating path for commands sent to the command register. When active high, commands are latched into the command register through the I/O ports on the rising edge of the $\overline{WE}$ signal.
ALE	**ADDRESS LATCH ENABLE** The ALE input controls the activating path for address to the internal address registers. Addresses are latched on the rising edge of $\overline{WE}$ with ALE high.
$\overline{CE}$	**CHIP ENABLE** The $\overline{CE}$ input is the device selection control. When the device is in the Busy state, $\overline{CE}$ high is ignored, and the device does not return to standby mode in program or erase operation.
$\overline{RE}$	**READ ENABLE** The $\overline{RE}$ input is the serial data-out control, and when active drives the data onto the I/O bus. Data is valid tREA after the falling edge of $\overline{RE}$ which also increments the internal column address counter by one.
$\overline{WE}$	**WRITE ENABLE** The $\overline{WE}$ input controls writes to the I/O port. Commands, address and data are latched on the rising edge of the $\overline{WE}$ pulse.
$\overline{WP}$	**WRITE PROTECT** The $\overline{WP}$ pin provides inadvertent program/erase protection during power transitions. The internal high voltage generator is reset when the $\overline{WP}$ pin is active low.
$R/\overline{B}$	**READY/BUSY OUTPUT** The $R/\overline{B}$ output indicates the status of the device operation. When low, it indicates that a program, erase or random read operation is in process and returns to high state upon completion. It is an open drain output and does not float to high-z condition when the chip is deselected or when outputs are disabled.
Vcc	**POWER** Vcc is the power supply for device.
Vss	**GROUND**
N.C	**NO CONNECTION** Lead is not internally connected.

NOTE : Connect all Vcc and Vss pins of each device to common power supply outputs.
Do not leave Vcc or Vss disconnected.

Figure 1. K9F8G08X0M Functional Block Diagram

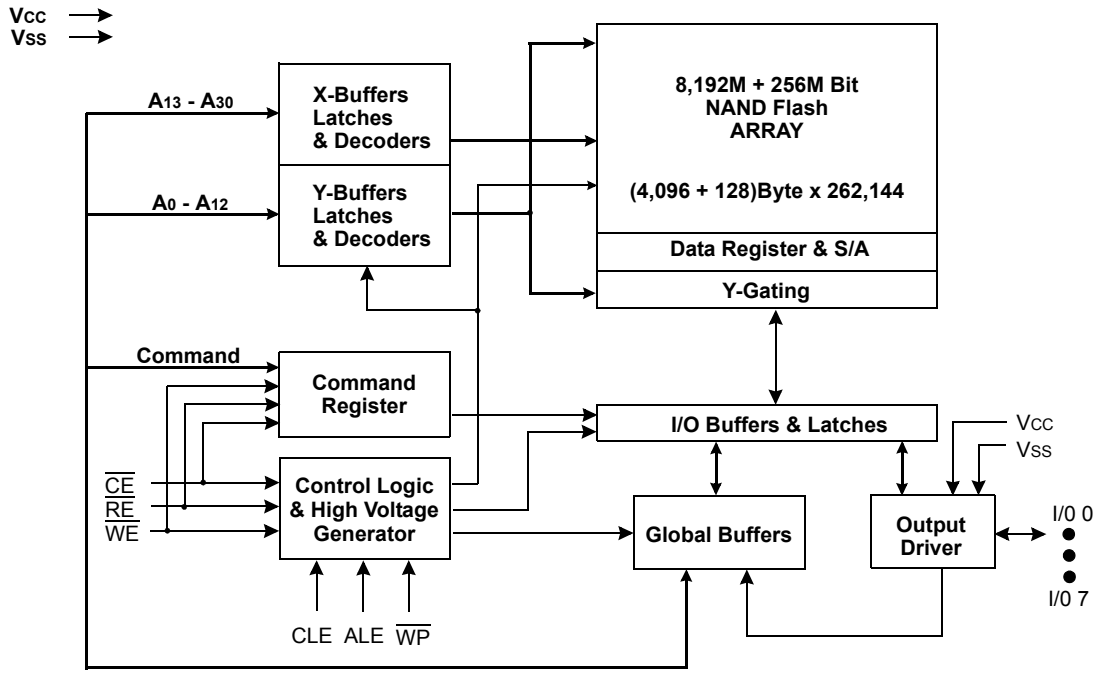

Figure 2. K9F8G08X0M Array Organization

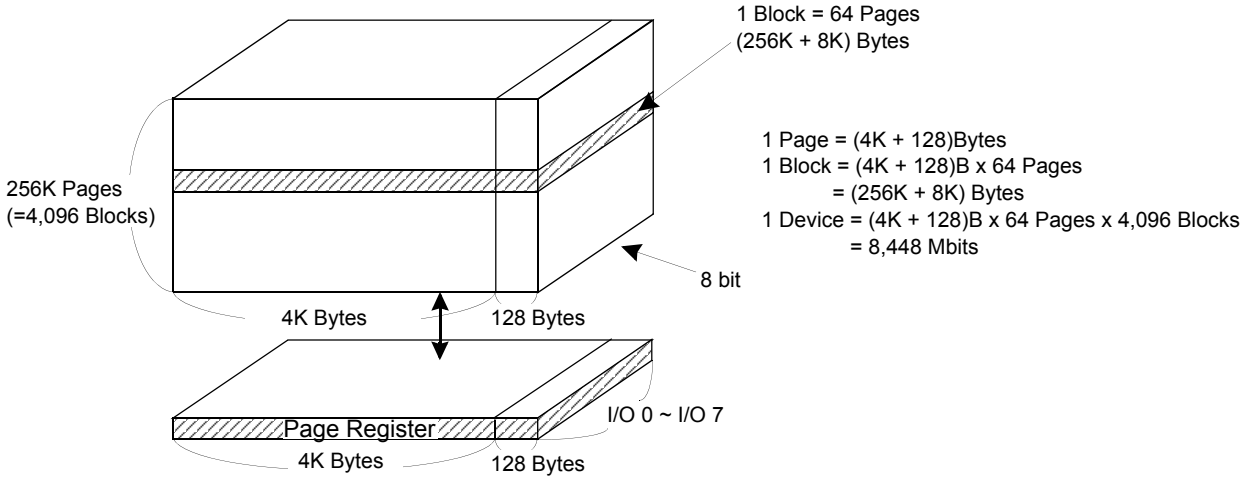

	I/O 0	I/O 1	I/O 2	I/O 3	I/O 4	I/O 5	I/O 6	I/O 7	
1st Cycle	A_0	A_1	A_2	A_3	A_4	A_5	A_6	A_7	**Column Address**
2nd Cycle	A_8	A_9	A_{10}	A_{11}	A_{12}	*L	*L	*L	**Column Address**
3rd Cycle	A_{13}	A_{14}	A_{15}	A_{16}	A_{17}	A_{18}	A_{19}	A_{20}	**Row Address**
4th Cycle	A_{21}	A_{22}	A_{23}	A_{24}	A_{25}	A_{26}	A_{27}	A_{28}	**Row Address**
5th Cycle	A_{29}	A_{30}	*L	*L	*L	*L	*L	*L	**Row Address**

NOTE : Column Address : Starting Address of the Register.
* L must be set to "Low".
* The device ignores any additional input of address cycles than required.

Product Introduction

The K9F8G08X0M is a 8,448Mbit(8,858,370,048 bit) memory organized as 262,114 rows(pages) by 4,224x8 columns. Spare 128x8 columns are located from column address of 4,096~4,223. A 4,224-byte data register is connected to memory cell arrays accommodating data transfer between the I/O buffers and memory during page read and page program operations. The memory array is made up of 32 cells that are serially connected to form a NAND structure. Each of the 32 cells resides in a different page. A block consists of two NAND structured strings. A NAND structure consists of 32 cells. Total 2,162,688 NAND cells reside in a block. The program and read operations are executed on a page basis, while the erase operation is executed on a block basis. The memory array consists of 4,096 separately erasable 256K-byte blocks. It indicates that the bit by bit erase operation is prohibited on the K9F8G08X0M.

The K9F8G08X0M has addresses multiplexed into 8 I/Os. This scheme dramatically reduces pin counts and allows system upgrades to future densities by maintaining consistency in system board design. Command, address and data are all written through I/O's by bringing $\overline{WE}$ to low while $\overline{CE}$ is low. Those are latched on the rising edge of $\overline{WE}$. Command Latch Enable(CLE) and Address Latch Enable(ALE) are used to multiplex command and address respectively, via the I/O pins. Some commands require one bus cycle. For example, Reset Command, Status Read Command, etc require just one cycle bus. Some other commands, like page read and block erase and page program, require two cycles: one cycle for setup and the other cycle for execution. The 1056M byte physical space requires 31 addresses, thereby requiring five cycles for addressing : 2 cycles of column address, 3 cycles of row address, in that order. Page Read and Page Program need the same five address cycles following the required command input. In Block Erase operation, however, only the three row address cycles are used. Device operations are selected by writing specific commands into the command register. Table 1 defines the specific commands of the K9F8G08X0M.

In addition to the enhanced architecture and interface, the device incorporates copy-back program feature from one page to another page without need for transporting the data to and from the external buffer memory. Since the time-consuming serial access and data-input cycles are removed, system performance for solid-state disk application is significantly increased.

Table 1. Command Sets

Function	1st Set	2nd Set	Acceptable Command during Busy
Read	00h	30h	
Read for Copy Back	00h	35h	
Read ID	90h	-	
Reset	FFh	-	O
Page Program	80h	10h	
Copy-Back Program	85h	10h	
Block Erase	60h	D0h	
Random Data Input(1)	85h	-	
Random Data Output(1)	05h	E0h	
Read Status	70h		O
Read EDC Status(4)	7Bh		O
Read Status 2	F1h		O
Two-Plane Read (3)	60h----60h	30h	
Two-Plane Read for Copy-Back	60h----60h	35h	
Two-Plane Random Data Output (1) (3)	00h----05h	E0h	
Two-Plane Page Program(2)	80h----11h	81h----10h	
Two-Plane Copy-Back Program(2)	85h----11h	81h----10h	
Two-Plane Block Erase	60h----60h	D0h	
Page Program with 2KB Data (2)	80h----11h	80h----10h	
Copy-Back Program with 2KB Data (2)	85h----11h	85h----10h	

NOTE : 1. Random Data Input/Output can be executed in a page.
2. Any command between 11h and 80h/81h/85h is prohibited except 70h/F1h and FFh.
3. Two-Plane Random Data Output must be used after Two-Plane Read operation
4. Read EDC Status is only available on Copy Back operation.

Caution : Any undefined command inputs are prohibited except for above command set of Table 1.

ABSOLUTE MAXIMUM RATINGS

Parameter		Symbol	Rating	Unit
			2.7V / 3.3V Device	
Voltage on any pin relative to VSS		V_{CC}	-0.6 to + 4.6	V
		V_{IN}	-0.6 to + 4.6	
		$V_{I/O}$	-0.6 to Vcc + 0.3 (< 4.6V)	
Temperature Under Bias	K9XXG08XXM-XCB0	T_{BIAS}	-10 to +125	°C
	K9XXG08XXM-XIB0		-40 to +125	
Storage Temperature	K9XXG08XXM-XCB0	T_{STG}	-65 to +150	°C
	K9XXG08XXM-XIB0			
Short Circuit Current		I_{OS}	5	mA

NOTE :
1. Minimum DC voltage is -0.6V on input/output pins. During transitions, this level may undershoot to -2.0V for periods <30ns.
   Maximum DC voltage on input/output pins is V_{CC}+0.3V which, during transitions, may overshoot to V_{CC}+2.0V for periods <20ns.
2. Permanent device damage may occur if ABSOLUTE MAXIMUM RATINGS are exceeded. Functional operation should be restricted to the conditions as detailed in the operational sections of this data sheet. Exposure to absolute maximum rating conditions for extended periods may affect reliability.

RECOMMENDED OPERATING CONDITIONS

(Voltage reference to GND, K9XXG08XXM-XCB0 :T_A=0 to 70°C, K9XXG08XXM-XIB0:T_A=-40 to 85°C)

Parameter	Symbol	K9F8G08B0M(2.7V)			K9XXG08UXM(3.3V)			Unit
		Min	Typ.	Max	Min	Typ.	Max	
Supply Voltage	V_{CC}	2.5	2.7	2.9	2.7	3.3	3.6	V
Supply Voltage	V_{SS}	0	0	0	0	0	0	V

DC AND OPERATING CHARACTERISTICS(Recommended operating conditions otherwise noted.)

Parameter		Symbol	Test Conditions	K9F8G08X0M						Unit
				2.7V			3.3V			
				Min	Typ	Max	Min	Typ	Max	
Operating Current	Page Read with Serial Access	I_{CC1}	tRC=25ns $\overline{CE}$=V_{IL}, I_{OUT}=0mA	-	15	30	-	15	30	mA
	Program	I_{CC2}	-							
	Erase	I_{CC3}	-							
Stand-by Current(TTL)		I_{SB1}	$\overline{CE}$=V_{IH}, $\overline{WP}$=0V/V_{CC}	-	-	1	-	-	1	
Stand-by Current(CMOS)		I_{SB2}	$\overline{CE}$=V_{CC}-0.2, $\overline{WP}$=0V/V_{CC}	-	10	50	-	10	50	μA
Input Leakage Current		I_{LI}	V_{IN}=0 to Vcc(max)	-	-	±10	-	-	±10	
Output Leakage Current		I_{LO}	V_{OUT}=0 to Vcc(max)	-	-	±10	-	-	±10	
Input High Voltage		V_{IH}(1)	-	0.8 xVcc	-	Vcc +0.3	0.8 xVcc	-	Vcc +0.3	V
Input Low Voltage, All inputs		V_{IL}(1)	-	-0.3	-	0.2 xVcc	-0.3	-	0.2 xVcc	
Output High Voltage Level		V_{OH}	K9F8G08B0M :I_{OH}=-100μA K9XXG08UXM :I_{OH}=-400μA	V_{CC} -0.4	-	-	2.4	-	-	
Output Low Voltage Level		V_{OL}	K9F8G08B0M :I_{OL}=100uA K9XXG08UXM :I_{OL}=2.1mA	-	-	0.4	-	-	0.4	
Output Low Current(R/$\overline{B}$)		I_{OL}(R/$\overline{B}$)	K9F8G08B0M :V_{OL}=0.1V K9XXG08UXM :V_{OL}=0.4V	3	4	-	8	10	-	mA

NOTE : 1. V_{IL} can undershoot to -0.4V and V_{IH} can overshoot to V_{CC} +0.4V for durations of 20 ns or less.
2. Typical value is measured at Vcc=3.3V, T_A=25°C. Not 100% tested.
3. The typical value of the K9KAG08U1M's I_{SB2} is 20μA and the maximum value is 100μA.

VALID BLOCK

Parameter	Symbol	Min	Typ.	Max	Unit
K9F8G08X0M	N_{VB}	4,016	-	4,096	Blocks
K9K8G08U1M	N_{VB}	8,032*	-	8,192*	Blocks

NOTE :
1. The device may include initial invalid blocks when first shipped. Additional invalid blocks may develop while being used. The number of valid blocks is presented with both cases of invalid blocks considered. Invalid blocks are defined as blocks that contain one or more bad bits which cause status failure during program and erase operation. Do not erase or program factory-marked bad blocks. Refer to the attached technical notes for appropriate management of invalid blocks.
2. The 1st block, which is placed on 00h block address, is guaranteed to be a valid block up to 1K program/erase cycles with 1bit/512Byte ECC.
3. The number of valid blocks is on the basis of single plane operations, and this may be decreased with two plane operations.

* : Each K9F8G08U0M chip in the K9KAG08U1M has Maximun 80 invalid blocks.

AC TEST CONDITION

(K9XXG08X0M-XCB0 :T_A=0 to 70°C, K9XXG08XXM-XIB0:T_A=-40 to 85°C,
K9F8G08B0M: Vcc=2.5V ~ 2.9V, K9XXG08UXM: Vcc=2.7V ~ 3.3V,unless otherwise noted)

Parameter	K9F8G08B0M	K9XXG08UXM
Input Pulse Levels	0V to Vcc	0V to Vcc
Input Rise and Fall Times	5ns	5ns
Input and Output Timing Levels	Vcc/2	Vcc/2
Output Load	1 TTL GATE and CL=30pF	1 TTL GATE and CL=50pF

CAPACITANCE(T_A=25°C, V_{CC}=2.7V/3.3V, f=1.0MHz)

Item	Symbol	Test Condition	Min	Max	Unit
Input/Output Capacitance	$C_{I/O}$	V_{IL}=0V	-	5	pF
	$C_{I/O(W)*}$	V_{IL}=0V	-	5	pF
Input Capacitance	C_{IN}	V_{IN}=0V	-	5	pF
	$C_{IN(W)*}$	V_{IN}=0V	-	5	pF

NOTE : 1. Capacitance is periodically sampled and not 100% tested.
2. $C_{I/O(W)*}$ and $C_{IN(W)*}$ are tested at wafer level.

MODE SELECTION

CLE	ALE	$\overline{CE}$	$\overline{WE}$	$\overline{RE}$	$\overline{WP}$	Mode	
H	L	L	↑	H	X	Read Mode	Command Input
L	H	L	↑	H	X		Address Input(5clock)
H	L	L	↑	H	H	Write Mode	Command Input
L	H	L	↑	H	H		Address Input(5clock)
L	L	L	↑	H	H	Data Input	
L	L	L	H	↓	X	Data Output	
X	X	X	X	H	X	During Read(Busy)	
X	X	X	X	X	H	During Program(Busy)	
X	X	X	X	X	H	During Erase(Busy)	
X	X(1)	X	X	X	L	Write Protect	
X	X	H	X	X	0V/V_{CC}(2)	Stand-by	

NOTE : 1. X can be V_{IL} or V_{IH}.
2. $\overline{WP}$ should be biased to CMOS high or CMOS low for standby.

Program / Erase Characteristics

Parameter	Symbol	Min	Typ	Max	Unit
Program Time	t_{PROG}	-	200	700	µs
Dummy Busy Time for Two-Plane Page Program	t_{DBSY}	-	0.5	1	µs
Number of Partial Program Cycles	Nop	-	-	4	cycles
Block Erase Time	t_{BERS}	-	1.5	2	ms

NOTE : 1. Typical value is measured at Vcc=3.3V, TA=25°C. Not 100% tested.
2. Typical program time is defined as the time within which more than 50% of the whole pages are programmed at 3.3V Vcc and 25°C temperature.

AC Timing Characteristics for Command / Address / Data Input

Parameter	Symbol	Min	Max	Unit
		3.3V(2.7V)	3.3V(2.7V)	
CLE Setup Time	t_{CLS}(1)	12	-	ns
CLE Hold Time	t_{CLH}	5	-	ns
$\overline{CE}$ Setup Time	t_{CS}(1)	20	-	ns
$\overline{CE}$ Hold Time	t_{CH}	5	-	ns
$\overline{WE}$ Pulse Width	t_{WP}	12	-	ns
ALE Setup Time	t_{ALS}(1)	12	-	ns
ALE Hold Time	t_{ALH}	5	-	ns
Data Setup Time	t_{DS}(1)	12	-	ns
Data Hold Time	t_{DH}	5	-	ns
Write Cycle Time	t_{WC}	25	-	ns
$\overline{WE}$ High Hold Time	t_{WH}	10	-	ns
Address to Data Loading Time	t_{ADL}(2)	100	-	ns

NOTES : 1. The transition of the corresponding control pins must occur only once while $\overline{WE}$ is held low
2. tADL is the time from the $\overline{WE}$ rising edge of final address cycle to the $\overline{WE}$ rising edge of first data cycle

AC Characteristics for Operation

Parameter	Symbol	Min	Max	Unit
		3.3V(2.7V)	3.3V(2.7V)	
Data Transfer from Cell to Register	t_R	-	25	µs
ALE to $\overline{RE}$ Delay	t_{AR}	10	-	ns
CLE to $\overline{RE}$ Delay	t_{CLR}	10	-	ns
Ready to $\overline{RE}$ Low	t_{RR}	20	-	ns
$\overline{RE}$ Pulse Width	t_{RP}	12	-	ns
$\overline{WE}$ High to Busy	t_{WB}	-	100	ns
Read Cycle Time	t_{RC}	25	-	ns
$\overline{RE}$ Access Time	t_{REA}	-	20	ns
$\overline{CE}$ Access Time	t_{CEA}	-	25	ns
$\overline{RE}$ High to Output Hi-Z	t_{RHZ}	-	100	ns
$\overline{CE}$ High to Output Hi-Z	t_{CHZ}	-	30	ns
$\overline{CE}$ High to ALE or CLE Don't Care	t_{CSD}	0	-	ns
$\overline{RE}$ High to Output Hold	t_{RHOH}	15	-	ns
$\overline{RE}$ Low to Output Hold	t_{RLOH}	5	-	ns
$\overline{CE}$ High to Output Hold	t_{COH}	15	-	ns
$\overline{RE}$ High Hold Time	t_{REH}	10	-	ns
Output Hi-Z to $\overline{RE}$ Low	t_{IR}	0	-	ns
$\overline{RE}$ High to $\overline{WE}$ Low	t_{RHW}	100	-	ns
$\overline{WE}$ High to $\overline{RE}$ Low	t_{WHR}	60	-	ns
Device Resetting Time(Read/Program/Erase)	t_{RST}	-	5/10/500(1)	µs
$\overline{WP}$ High to $\overline{WE}$ Low	t_{WW}	100	-	ns

NOTE: 1. If reset command(FFh) is written at Ready state, the device goes into Busy for maximum 5µs.

NAND Flash Technical Notes

Initial Invalid Block(s)

Initial invalid blocks are defined as blocks that contain one or more initial invalid bits whose reliability is not guaranteed by Samsung. The information regarding the initial invalid block(s) is called the initial invalid block information. Devices with initial invalid block(s) have the same quality level as devices with all valid blocks and have the same AC and DC characteristics. An initial invalid block(s) does not affect the performance of valid block(s) because it is isolated from the bit line and the common source line by a select transistor. The system design must be able to mask out the initial invalid block(s) via address mapping. The 1st block, which is placed on 00h block address, is guaranteed to be a valid block up to 1K program/erase cycles with 1bit/512Byte ECC.

Identifying Initial Invalid Block(s)

All device locations are erased(FFh) except locations where the initial invalid block(s) information is written prior to shipping. The initial invalid block(s) status is defined by the 1st byte in the spare area. Samsung makes sure that either the 1st or 2nd page of every initial invalid block has non-FFh data at the column address of 4,096. Since the initial invalid block information is also erasable in most cases, it is impossible to recover the information once it has been erased. Therefore, the system must be able to recognize the initial invalid block(s) based on the original initial invalid block information and create the initial invalid block table via the following suggested flow chart(Figure 3). Any intentional erasure of the original initial invalid block information is prohibited.

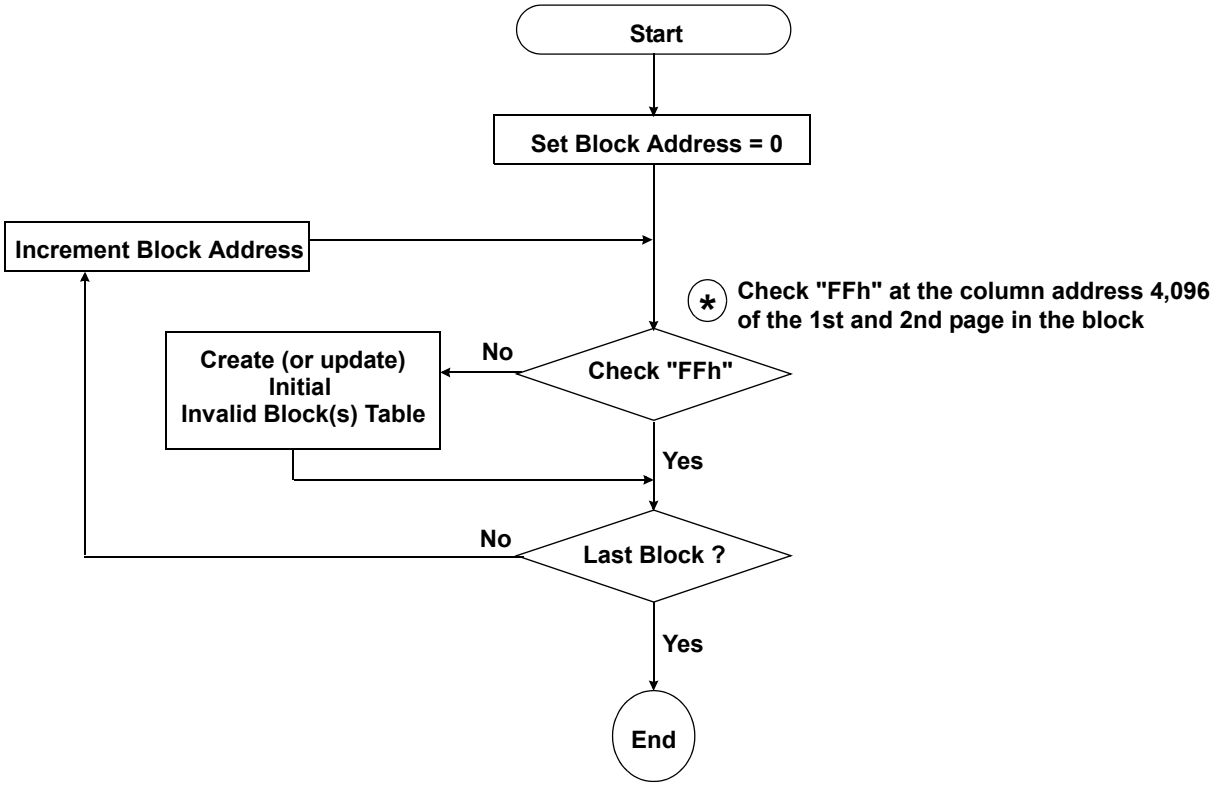

Figure 3. Flow chart to create initial invalid block table

NAND Flash Technical Notes *(Continued)*

Error in write or read operation

Within its life time, additional invalid blocks may develop with NAND Flash memory. Refer to the qualification report for the actual data.The following possible failure modes should be considered to implement a highly reliable system. In the case of status read failure after erase or program, block replacement should be done. Because program status fail during a page program does not affect the data of the other pages in the same block, block replacement can be executed with a page-sized buffer by finding an erased empty block and reprogramming the current target data and copying the rest of the replaced block. In case of Read, ECC must be employed. To improve the efficiency of memory space, it is recommended that the read or verification failure due to single bit error be reclaimed by ECC without any block replacement. The said additional block failure rate does not include those reclaimed blocks.

Failure Mode		Detection and Countermeasure sequence
Write	Erase Failure	Status Read after Erase --> Block Replacement
	Program Failure	Status Read after Program --> Block Replacement
Read	Single Bit Failure	Verify ECC -> ECC Correction

ECC : Error Correcting Code --> Hamming Code etc.
Example) 1bit correction & 2bit detection

Program Flow Chart

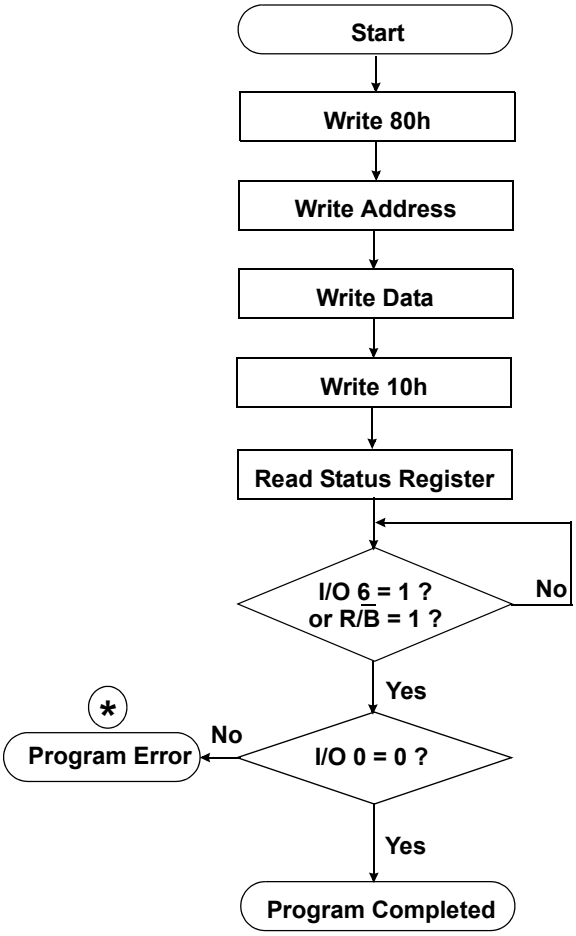

(*) : If program operation results in an error, map out the block including the page in error and copy the target data to another block.

NAND Flash Technical Notes *(Continued)*

Erase Flow Chart

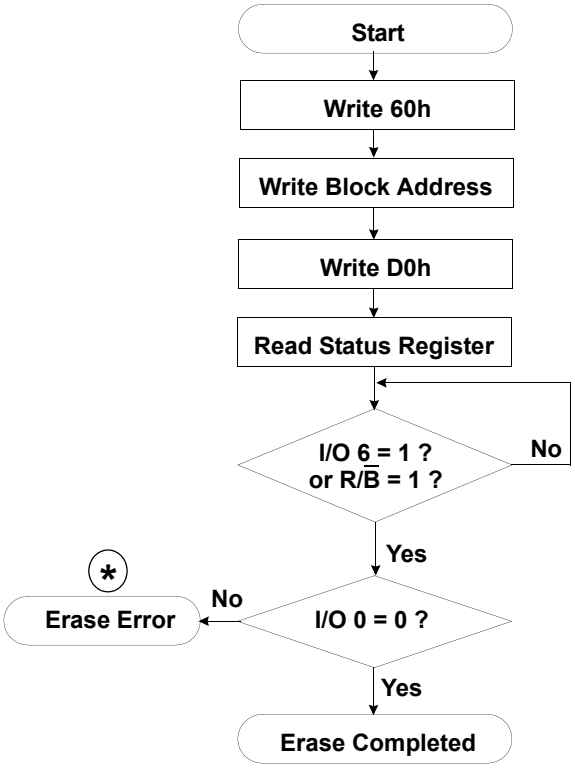

Read Flow Chart

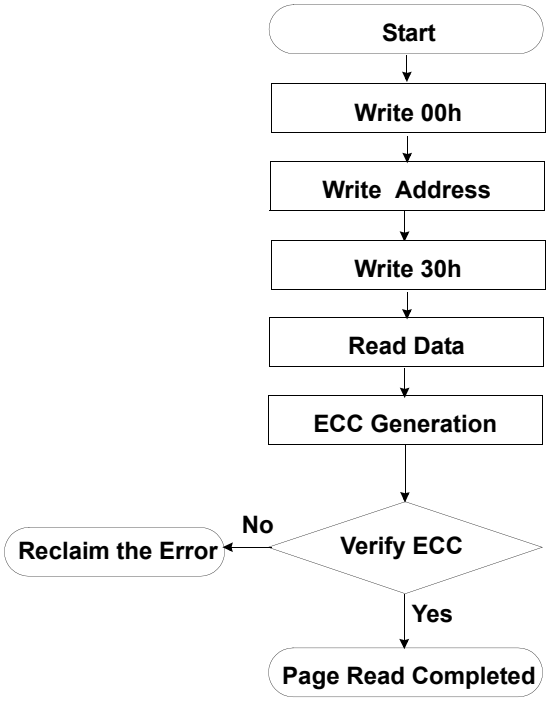

(*) : If erase operation results in an error, map out the failing block and replace it with another block.

Block Replacement

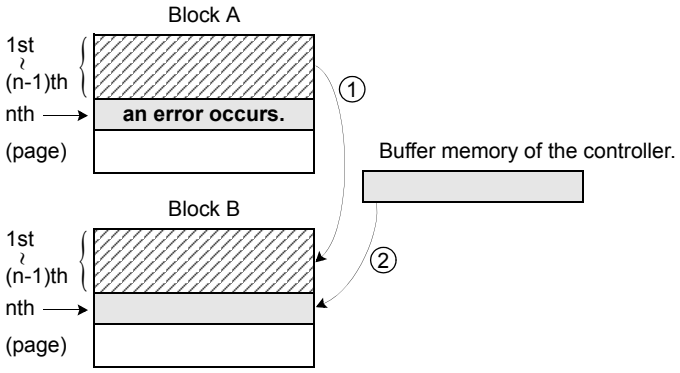

* Step1
When an error happens in the nth page of the Block 'A' during erase or program operation.
* Step2
Copy the data in the 1st ~ (n-1)th page to the same location of another free block. (Block 'B')
* Step3
Then, copy the nth page data of the Block 'A' in the buffer memory to the nth page of the Block 'B'.
* Step4
Do not erase or program Block 'A' by creating an 'invalid block' table or other appropriate scheme.

NAND Flash Technical Notes *(Continued)*

Copy-Back Operation with EDC & Sector Definition for EDC

Generally, copy-back program is very powerful to move data stored in a page without utilizing any external memory. But, if the source page has one bit error due to charge loss or charge gain, then without EDC, the copy-back program operation could also accumulate bit errors.

K9F8G08X0M supports copy-back with EDC to prevent cumulative bit errors. To make EDC valid, the page program operation should be performed on either whole page(4224byte) or sector(528byte). **Modifying the data of a sector by Random Data Input before Copy-Back Program must be performed for the whole sector and is allowed only once per each sector. Any partial modification smaller than a sector corrupts the on-chip EDC codes.**

A 4,224-byte page is composed of 8 sectors of 528-byte and each 528-byte sector is composed of 512-byte main area and 16-byte spare area.

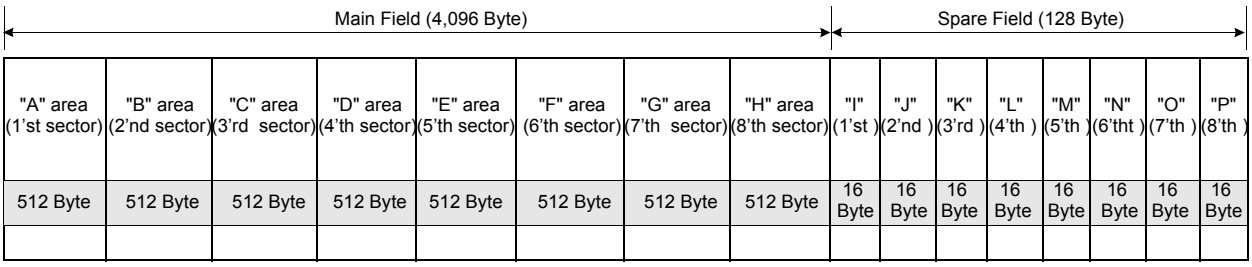

Table 2. Definition of the 528-Byte Sector

Sector	Main Field (Column 0~4,095)		Spare Field (Column 4,096~4,223)	
	Area Name	Column Address	Area Name	Column Address
1'st 528-Byte Sector	"A"	0 ~ 511	"I"	4,096 ~ 4,111
2'nd 528-Byte Sector	"B"	512 ~ 1,023	"J"	4,112 ~ 4,127
3'rd 528-Byte Sector	"C"	1,024 ~ 1,535	"K"	4,128 ~ 4,143
4'th 528-Byte Sector	"D"	1,536 ~ 2,047	"L"	4,114 ~ 4,159
5'th 528-Byte Sector	"E"	2,048 ~ 2,559	"M"	4,160 ~ 4,175
6'th 528-Byte Sector	"F"	2,560 ~ 3,071	"N"	4,176 ~ 4,191
7'th 528-Byte Sector	"G"	3,072 ~ 3,583	"O"	4,192 ~ 4,207
8'th 528-Byte Sector	"H"	3,584 ~ 4,095	"P"	4,208 ~ 4,223

Addressing for program operation

Within a block, the pages must be programmed consecutively from the LSB (least significant bit) page of the block to MSB (most significant bit) pages of the block. Random page address programming is prohibited. In this case, the definition of LSB page is the LSB among the pages to be programmed. Therefore, LSB doesn't need to be page 0.

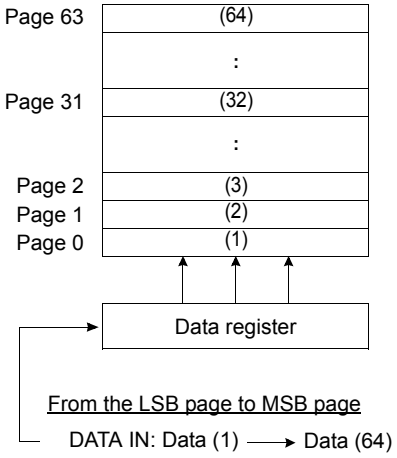

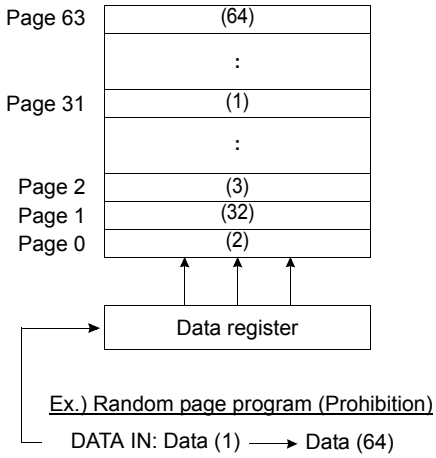

System Interface Using $\overline{CE}$ don't-care.

For an easier system interface, $\overline{CE}$ may be inactive during the data-loading or serial access as shown below. The internal 4,224byte data registers are utilized as separate buffers for this operation and the system design gets more flexible. In addition, for voice or audio applications which use slow cycle time on the order of μ-seconds, de-activating $\overline{CE}$ during the data-loading and serial access would provide significant savings in power consumption.

Figure 4. Program Operation with $\overline{CE}$ don't-care.

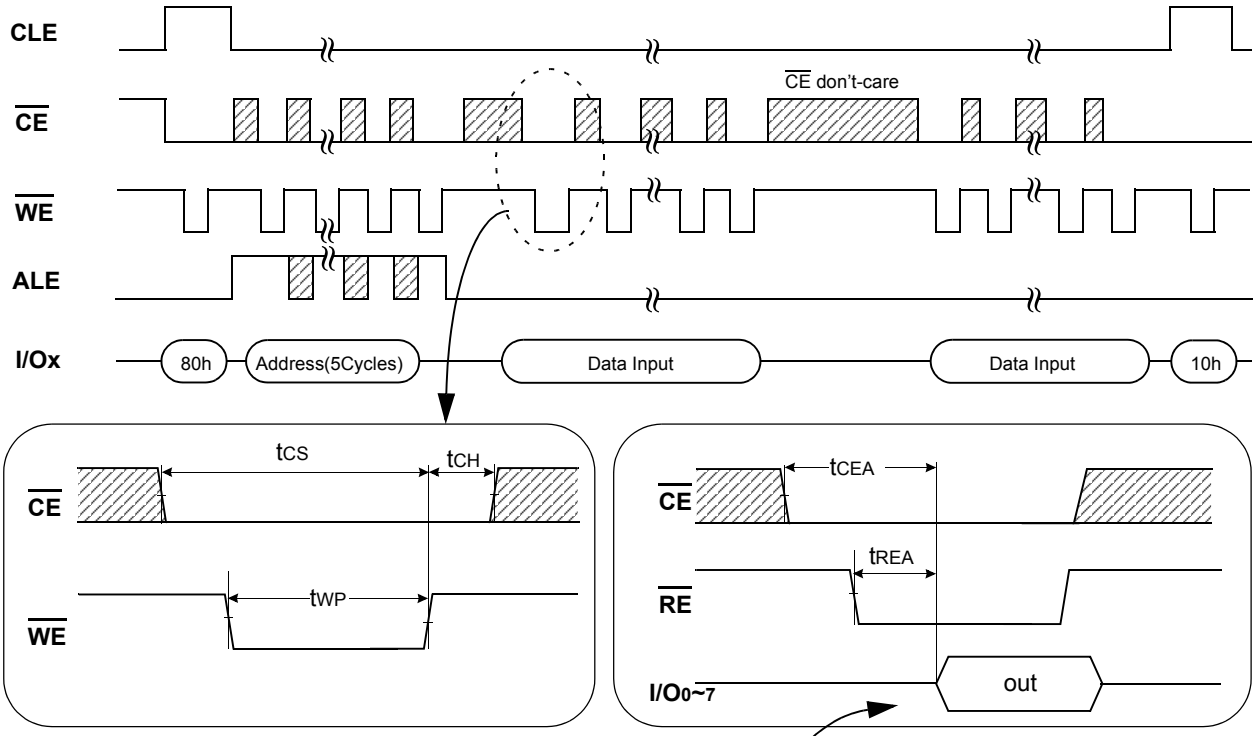

Figure 5. Read Operation with $\overline{CE}$ don't-care.

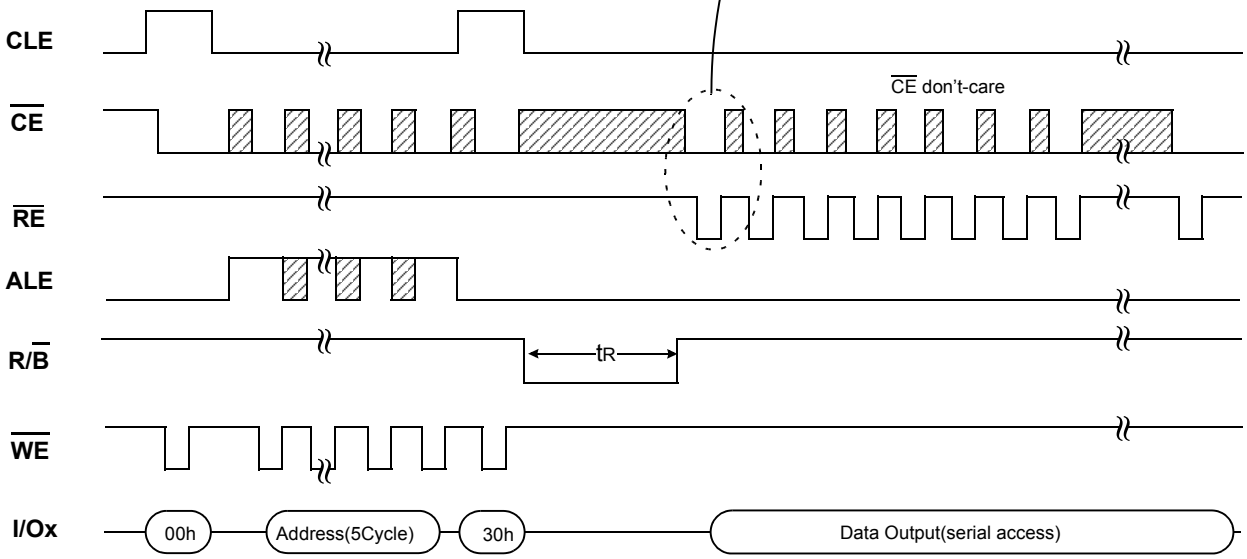

NOTE

Device	I/O	DATA	ADDRESS				
	I/Ox	Data In/Out	Col. Add1	Col. Add2	Row Add1	Row Add2	Row Add3
K9F8G08X0M	I/O 0 ~ I/O 7	4,114byte	A0~A7	A8~A12	A13~A20	A21~A28	A29~A30

Command Latch Cycle

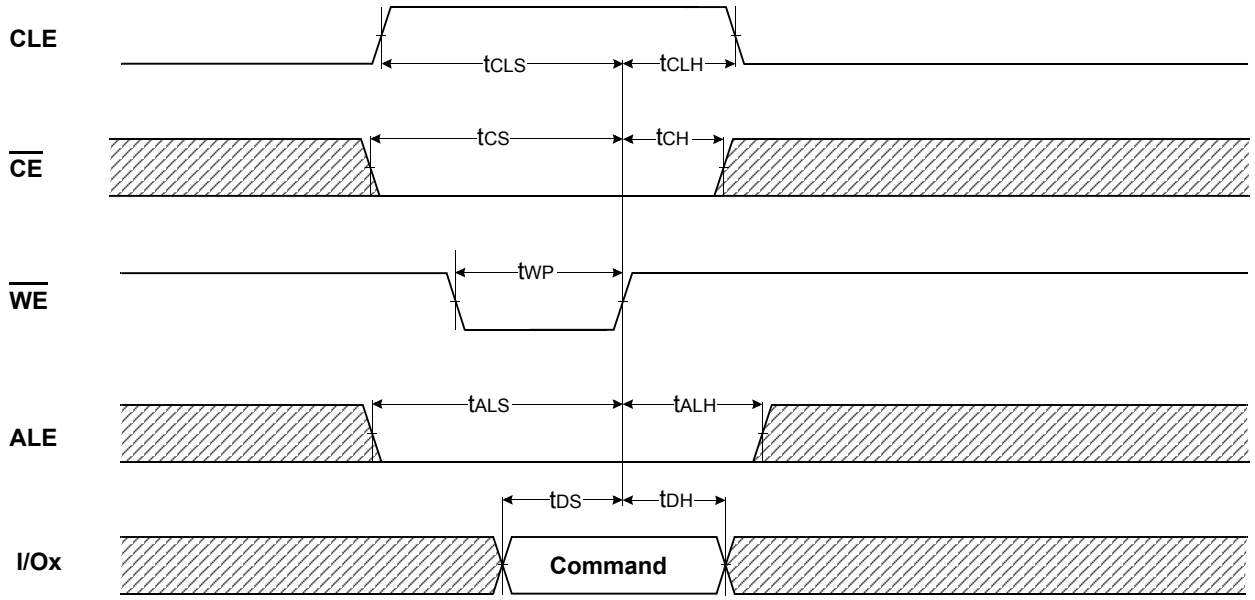

Address Latch Cycle

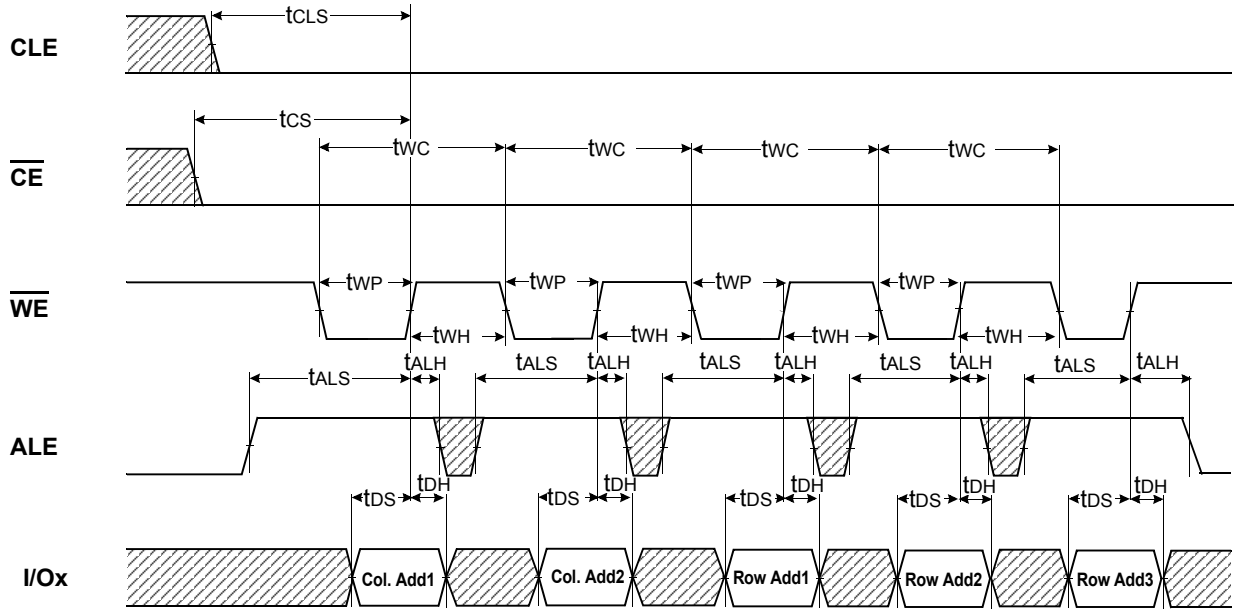

Input Data Latch Cycle

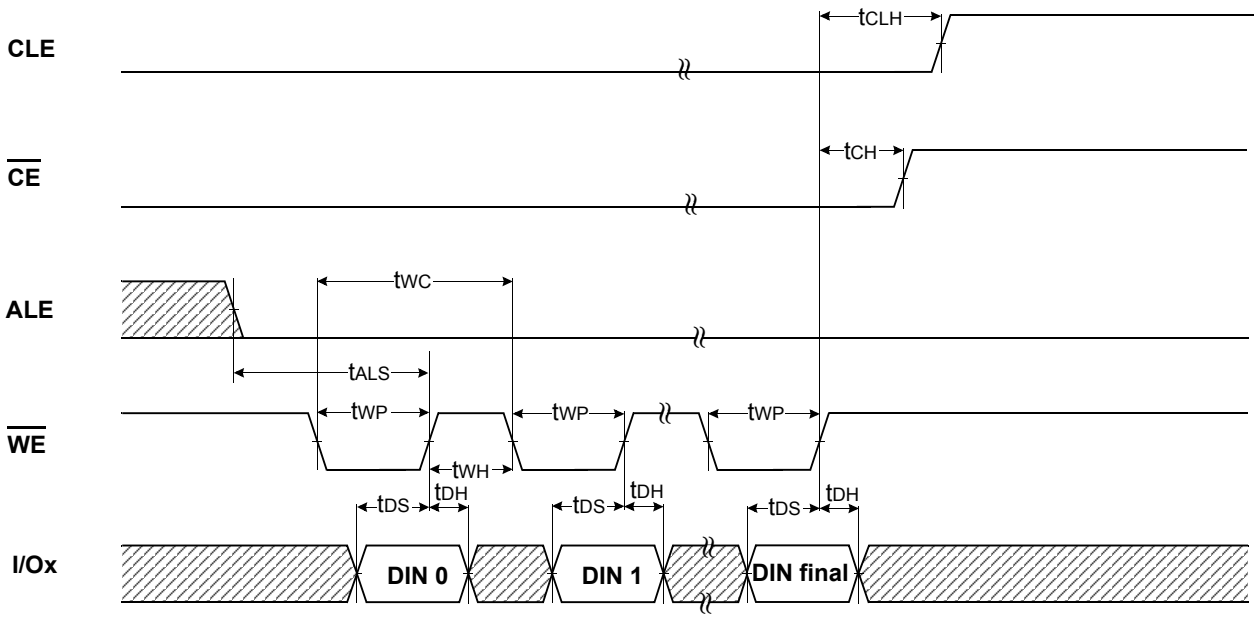

* Serial Access Cycle after Read(CLE=L, $\overline{WE}$=H, ALE=L)

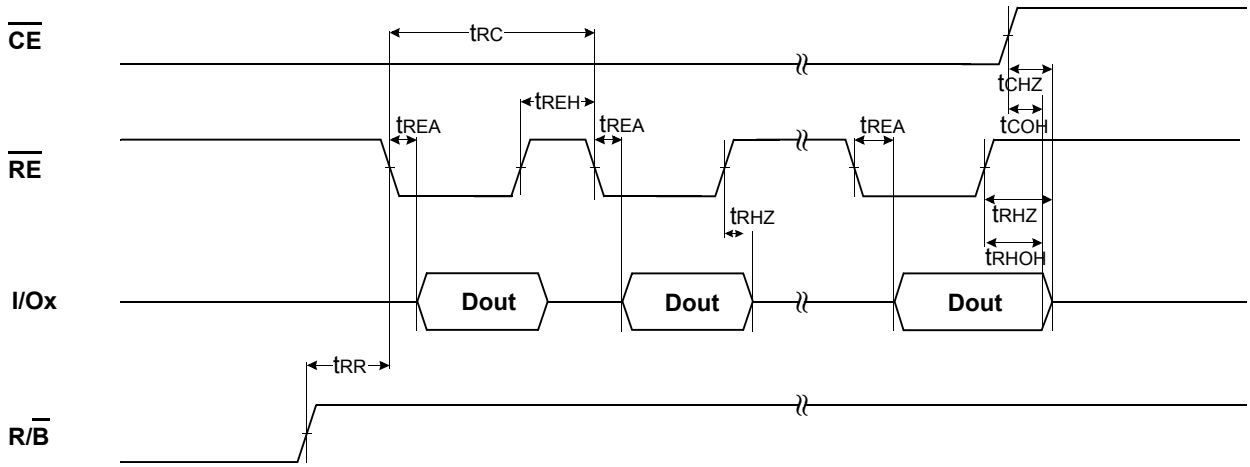

NOTES : 1.Transition is measured at ±200mV from steady state voltage with load.
This parameter is sampled and not 100% tested.
2. tRLOH is valid when frequency is higher than 33MHz.
tRHOH starts to be valid when frequency is lower than 33MHz.

Serial Access Cycle after Read(EDO Type, CLE=L, $\overline{WE}$=H, ALE=L)

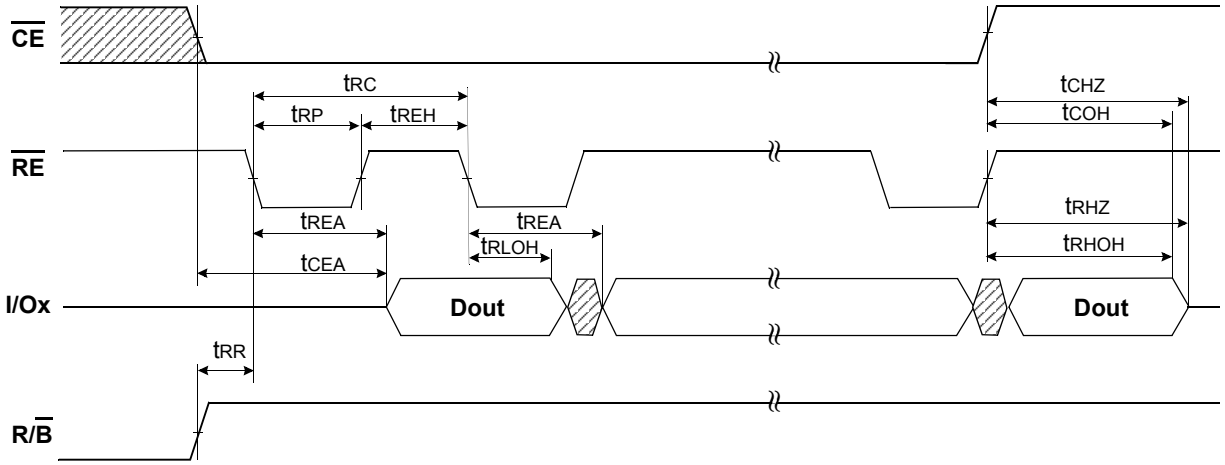

NOTES : 1. Transition is measured at ±200mV from steady state voltage with load.
This parameter is sampled and not 100% tested.
2. tRLOH is valid when frequency is higher than 33MHz.
tRHOH starts to be valid when frequency is lower than 33MHz.

Status Read Cycle & EDC Status Read Cycle

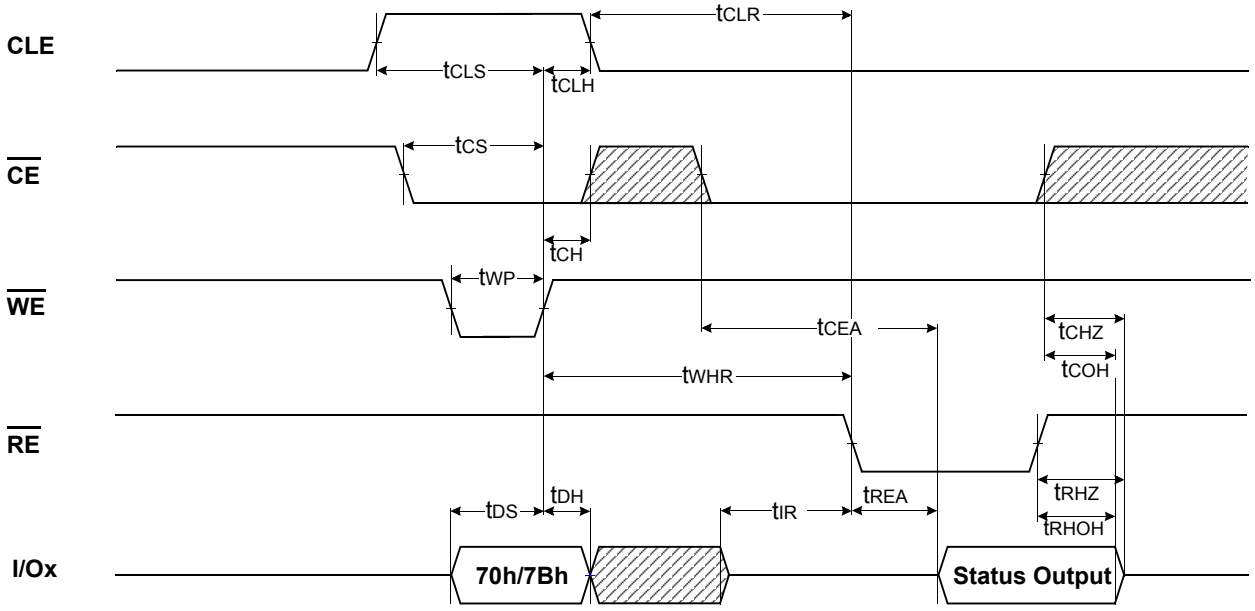

Read Operation

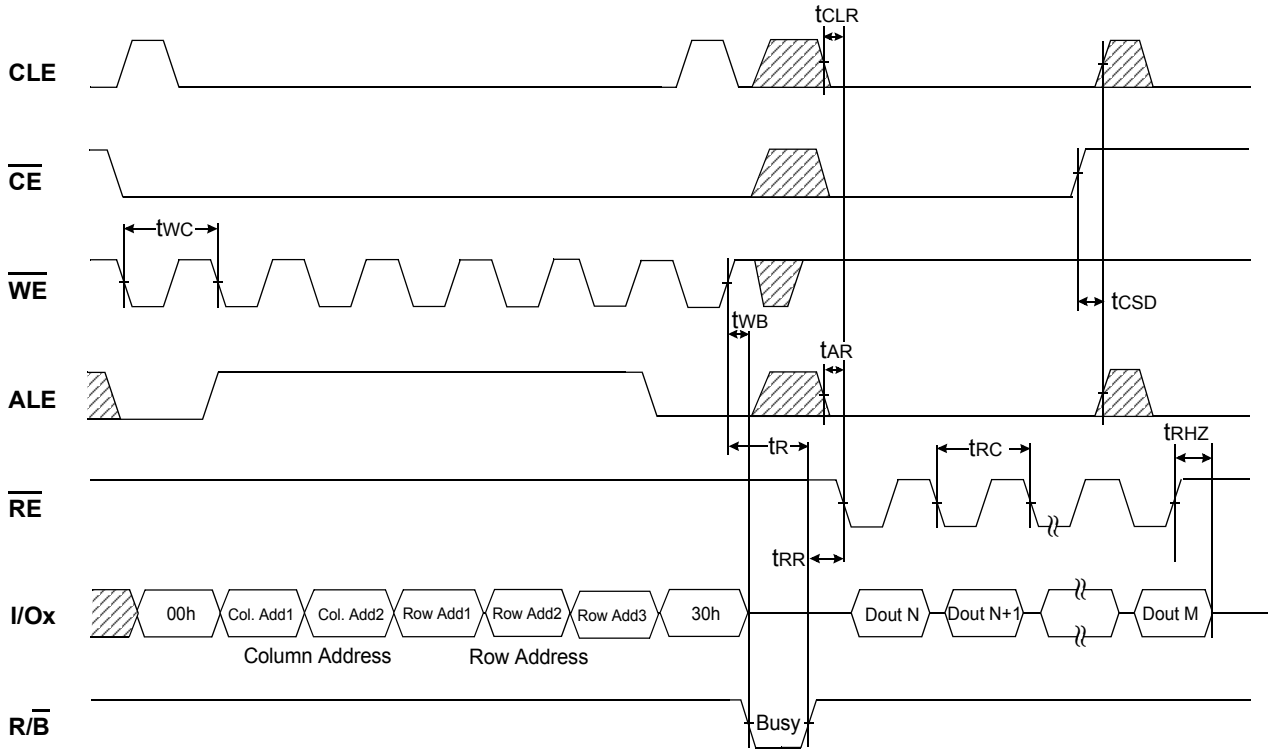

Read Operation(Intercepted by $\overline{CE}$)

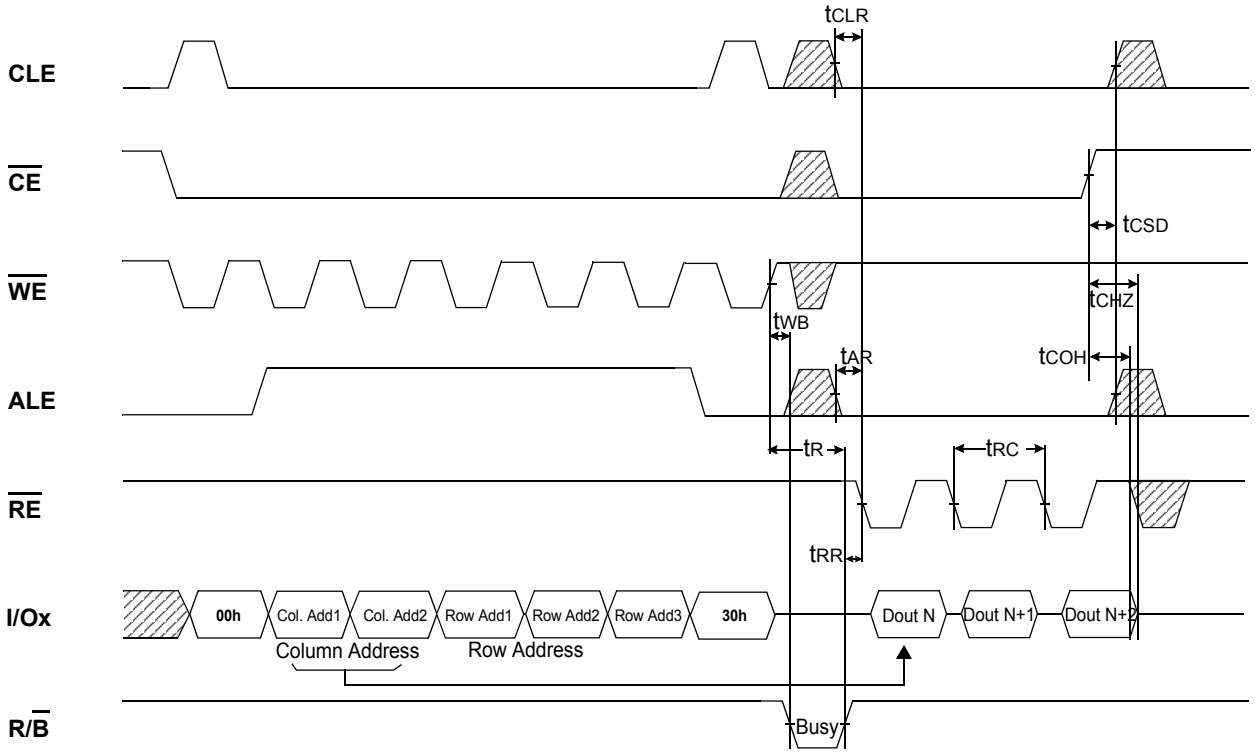

Random Data Output In a Page

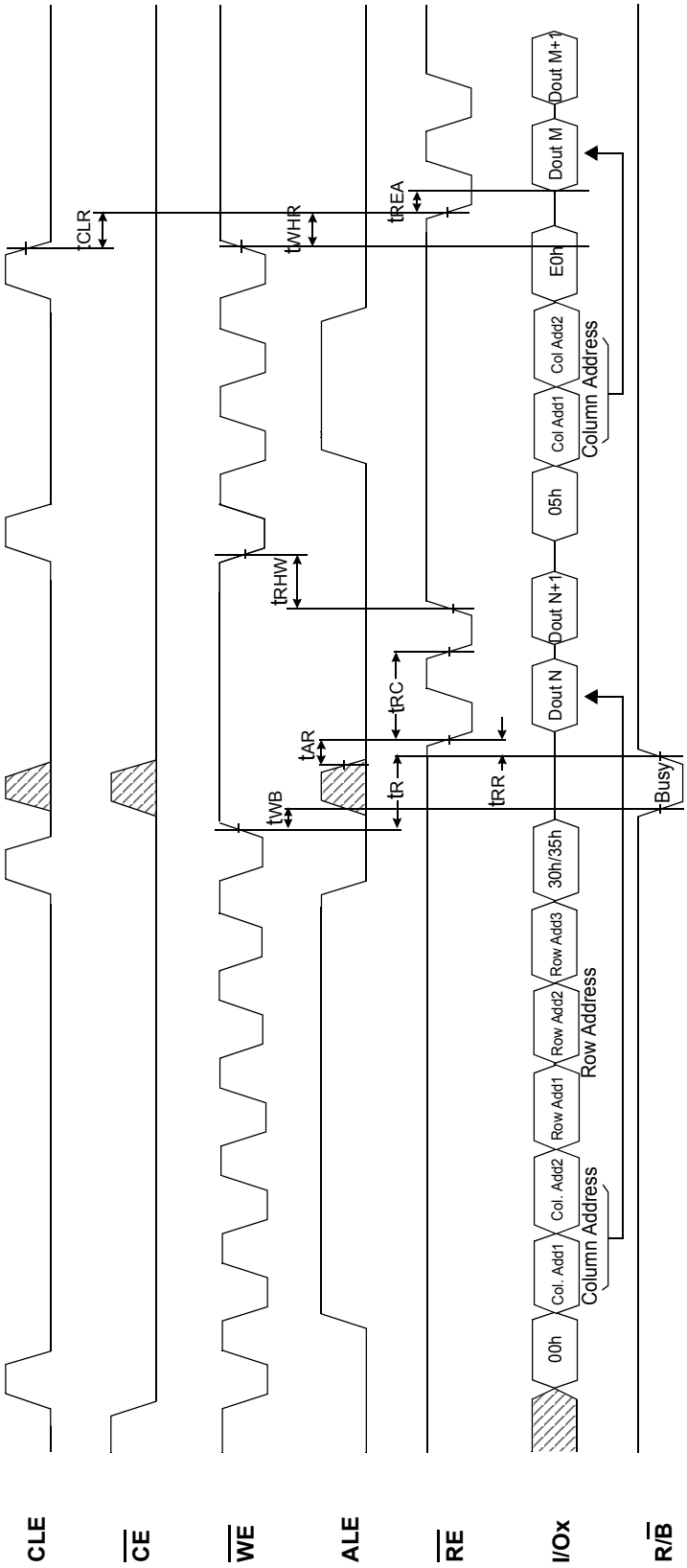

Page Program Operation

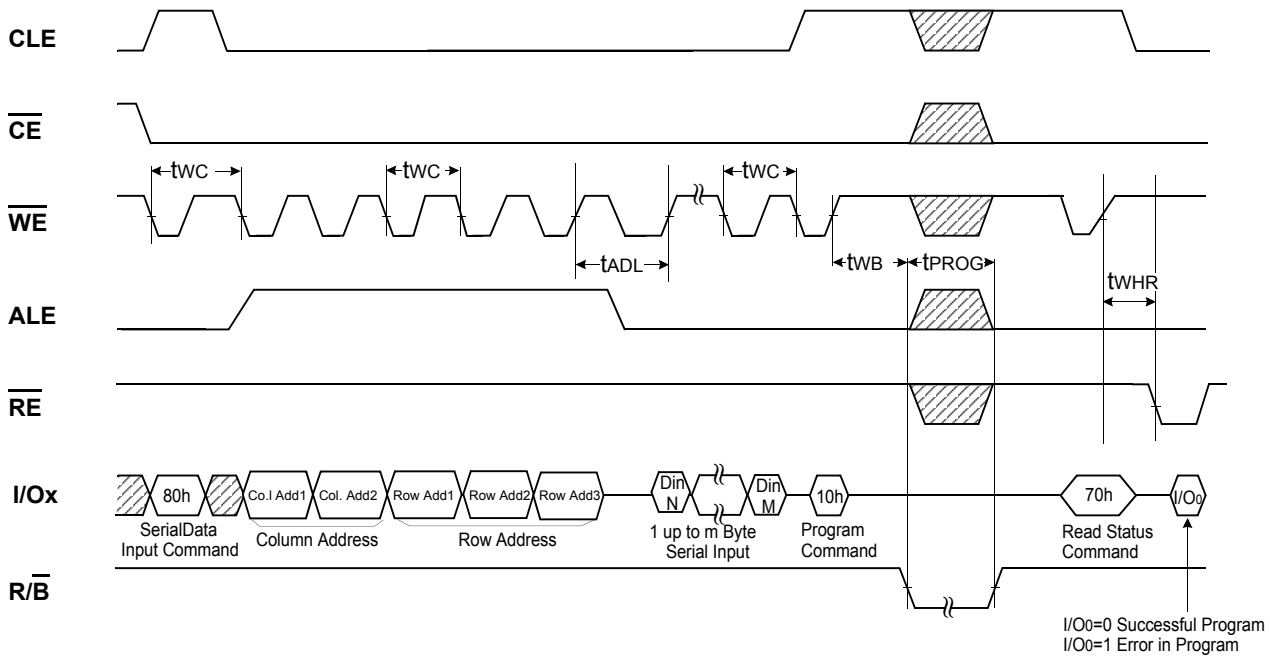

NOTES : tADL is the time from the $\overline{WE}$ rising edge of final address cycle to the $\overline{WE}$ rising edge of first data cycle.

Page Program Operation with Random Data Input

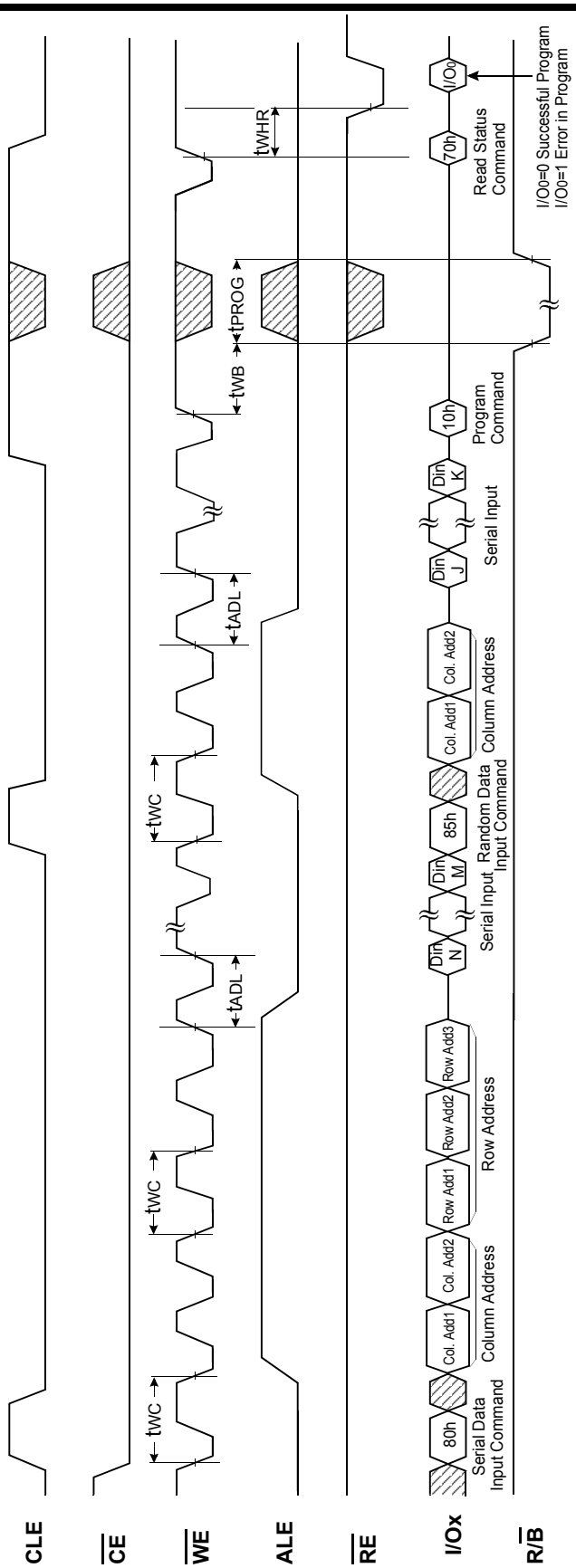

NOTES : 1. tADL is the time from the $\overline{WE}$ rising edge of final address cycle to the $\overline{WE}$ rising edge of first data cycle.
2. For EDC operation, only one time random data input is possible at the same address.

Copy-Back Program Operation With Random Data Input

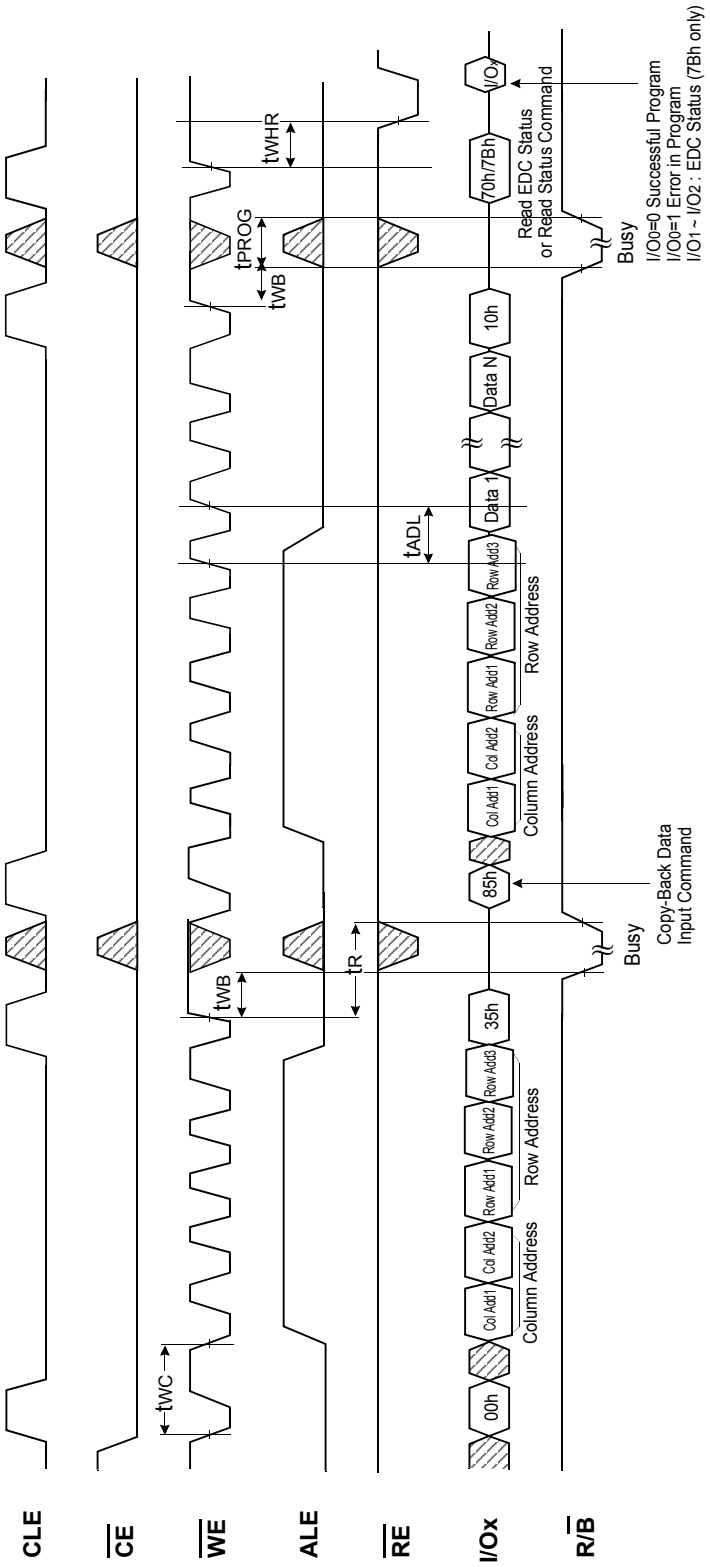

NOTES : 1. tADL is the time from the $\overline{WE}$ rising edge of final address cycle to the $\overline{WE}$ rising edge of first data cycle.
2. For EDC operation, only one time random data input is possible at the same address.

Block Erase Operation

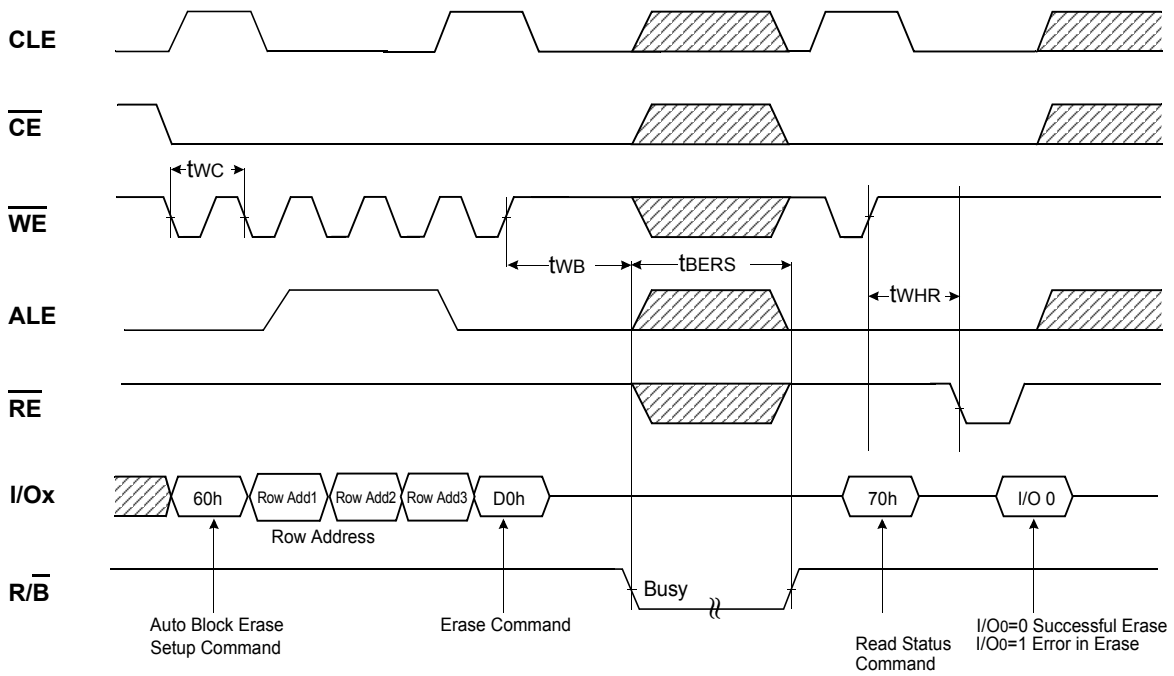

Two-Plane Page Read Operation with Two-Plane Random Data Out

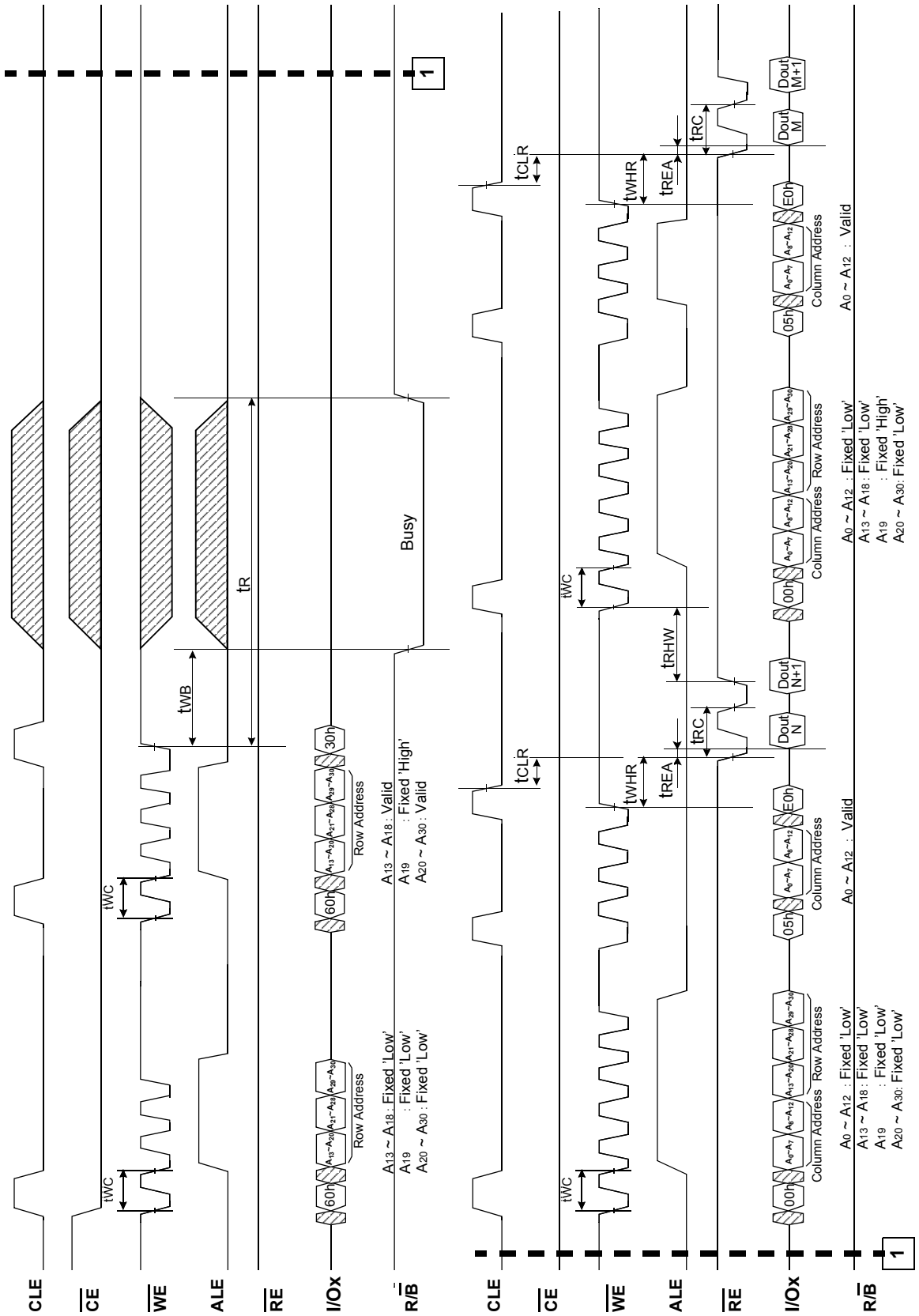

Two-Plane Page Program Operation

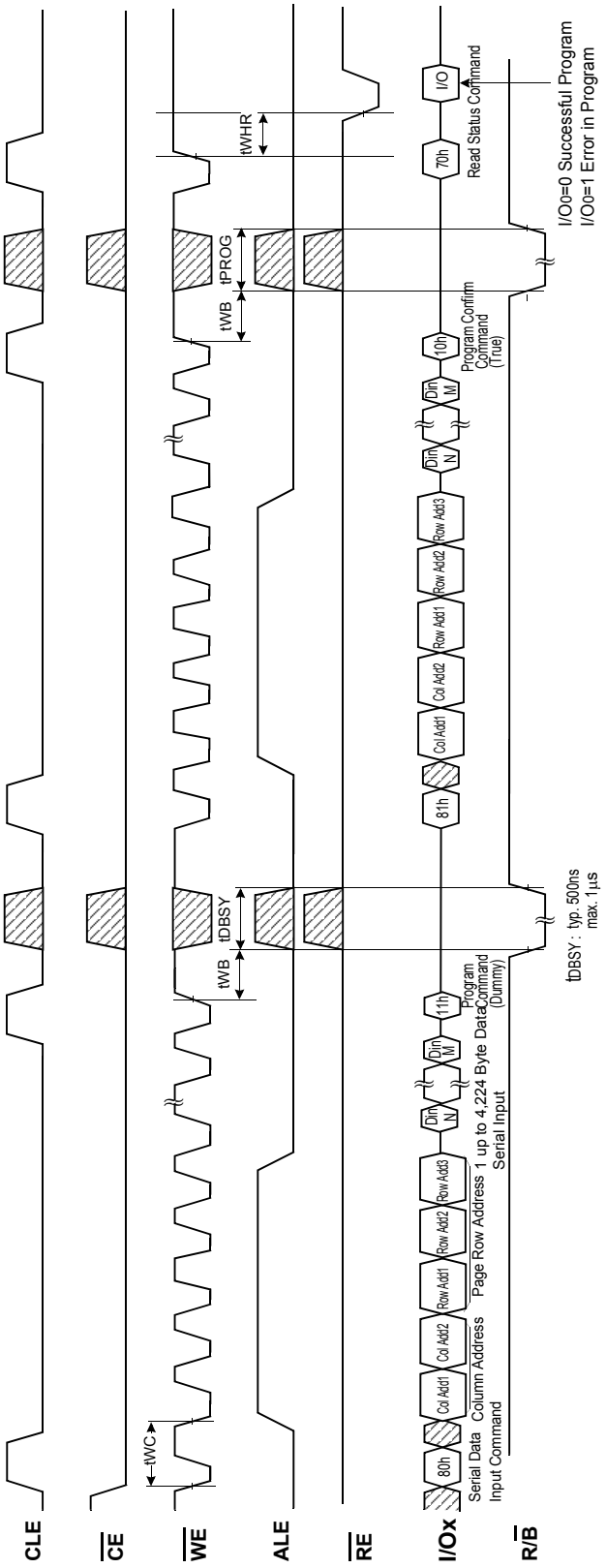

Ex.) Two-Plane Page Program

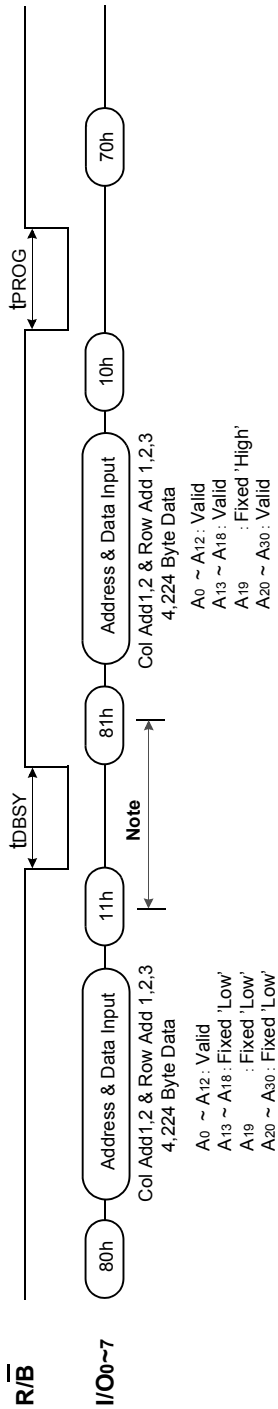

Note: Any command between 11h and 81h is prohibited except 70h/F1h and FFh.

Two-Plane Block Erase Operation

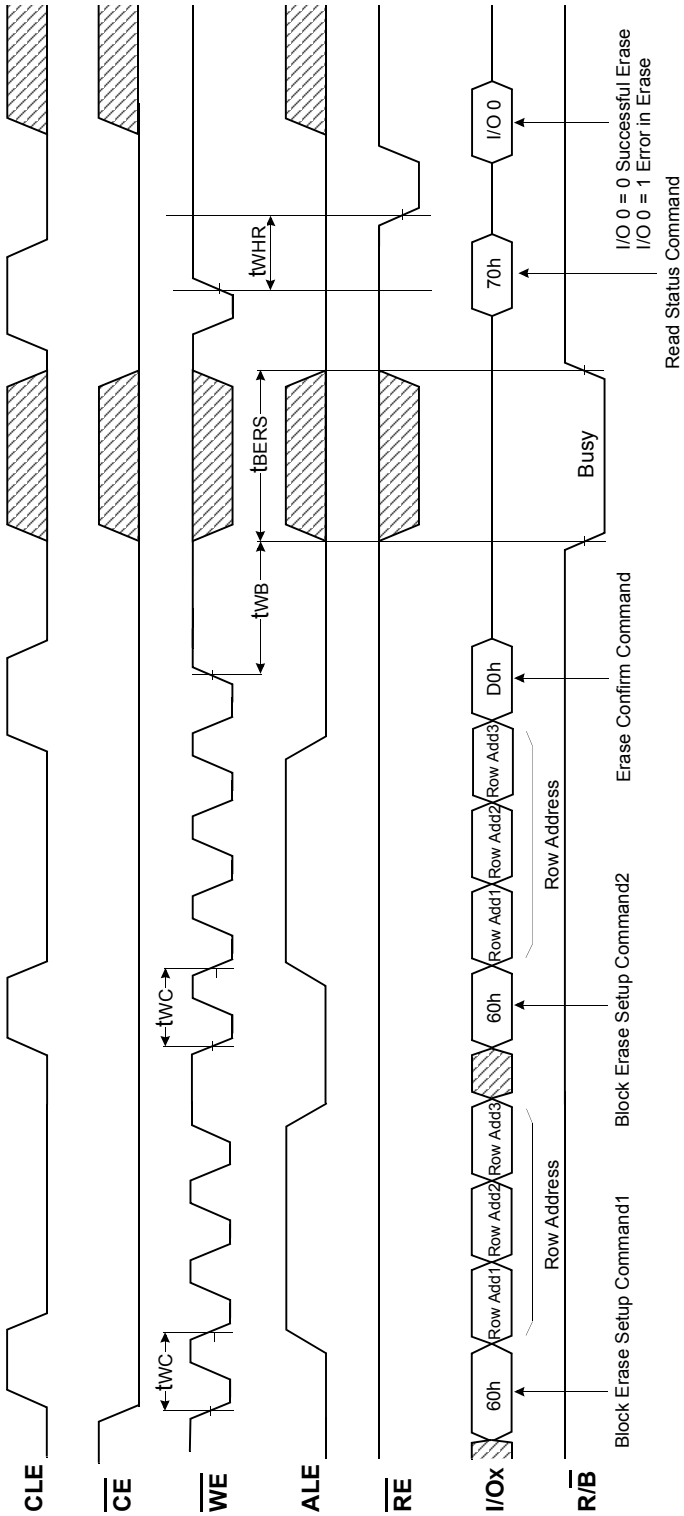

Ex.) Address Restriction for Two-Plane Block Erase Operation

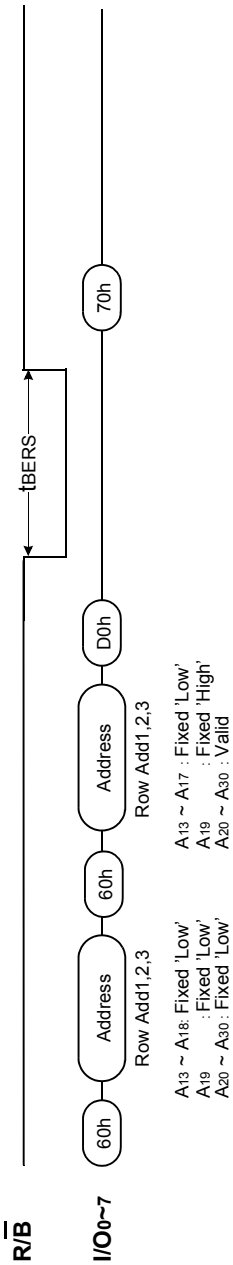

Read ID Operation

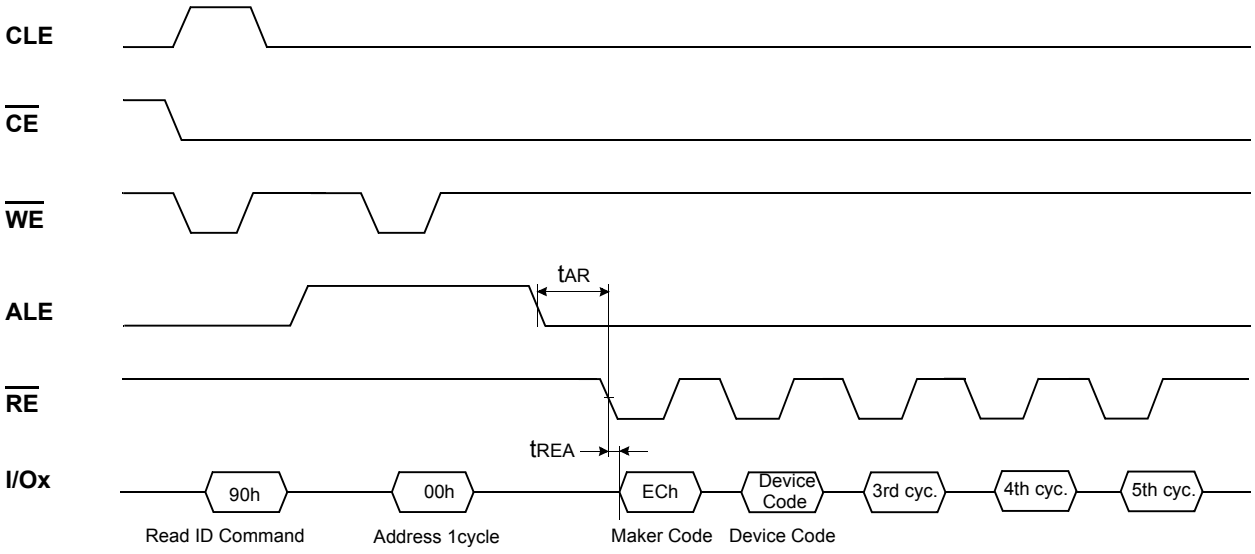

Device	Device Code (2nd Cycle)	3rd Cycle	4th Cycle	5th Cycle
K9F8G08B0M	Same as K9F8G08U0M			
K9F8G08U0M	D3	10h	A6h	64h

ID Definition Table

90 ID : Access command = 90H

	Description
1st Byte	Maker Code
2nd Byte	Device Code
3rd Byte	Internal Chip Number, Cell Type, Number of Simultaneously Programmed Pages, Etc
4th Byte	Page Size, Block Size,Redundant Area Size, Organization, Serial Access Minimum
5th Byte	Plane Number, Plane Size

3rd ID Data

	Description	I/O7	I/O6	I/O5 I/O4	I/O3 I/O2	I/O1 I/O0
Internal Chip Number	1 2 4 8					0 0 0 1 1 0 1 1
Cell Type	2 Level Cell 4 Level Cell 8 Level Cell 16 Level Cell				0 0 0 1 1 0 1 1	
Number of Simultaneously Programmed Pages	1 2 4 8			0 0 0 1 1 0 1 1		
Interleave Program Between multiple chips	Not Support Support		0 1			
Cache Program	Not Support Support	0 1				

4th ID Data

	Description	I/O7	I/O6	I/O5 I/	I/O3	I/O2	I/O1 I/O0
Page Size (w/o redundant area)	1KB 2KB 4KB 8KB						0 0 0 1 1 0 1 1
Block Size (w/o redundant area)	64KB 128KB 256KB 512KB			0 0 0 1 1 0 1 1			
Redundant Area Size (byte/512byte)	8 16					0 1	
Organization	x8 x16		0 1				
Serial Access Minimum	50ns/30ns 25ns Reserved Reserved	0 1 0 1			0 0 1 1		

5th ID Data

	Description	I/O7	I/O6	I/O5	I/O4	I/O3	I/O2	I/O1	I/O0
Plane Number	1					0	0		
	2					0	1		
	4					1	0		
	8					1	1		
Plane Size (w/o redundant Area)	64Mb		0	0	0				
	128Mb		0	0	1				
	256Mb		0	1	0				
	512Mb		0	1	1				
	1Gb		1	0	0				
	2Gb		1	0	1				
	4Gb		1	1	0				
	8Gb		1	1	1				
Reserved		0						0	0

Device Operation

PAGE READ

Page read is initiated by writing 00h-30h to the command register along with five address cycles. After initial power up, 00h command is latched. Therefore only five address cycles and 30h command initiates that operation after initial power up. The 4,224 bytes of data within the selected page are transferred to the data registers in less than 25μs(t_R). The system controller can detect the completion of this data transfer(tR) by analyzing the output of R/$\overline{B}$ pin. Once the data in a page is loaded into the data registers, they may be read out in 25ns cycle time by sequentially pulsing $\overline{RE}$. The repetitive high to low transitions of the $\overline{RE}$ clock make the device output the data starting from the selected column address up to the last column address.
The device may output random data in a page instead of the consecutive sequential data by writing random data output command. The column address of next data, which is going to be out, may be changed to the address which follows random data output command. Random data output can be operated multiple times regardless of how many times it is done in a page.

Figure 6. Read Operation

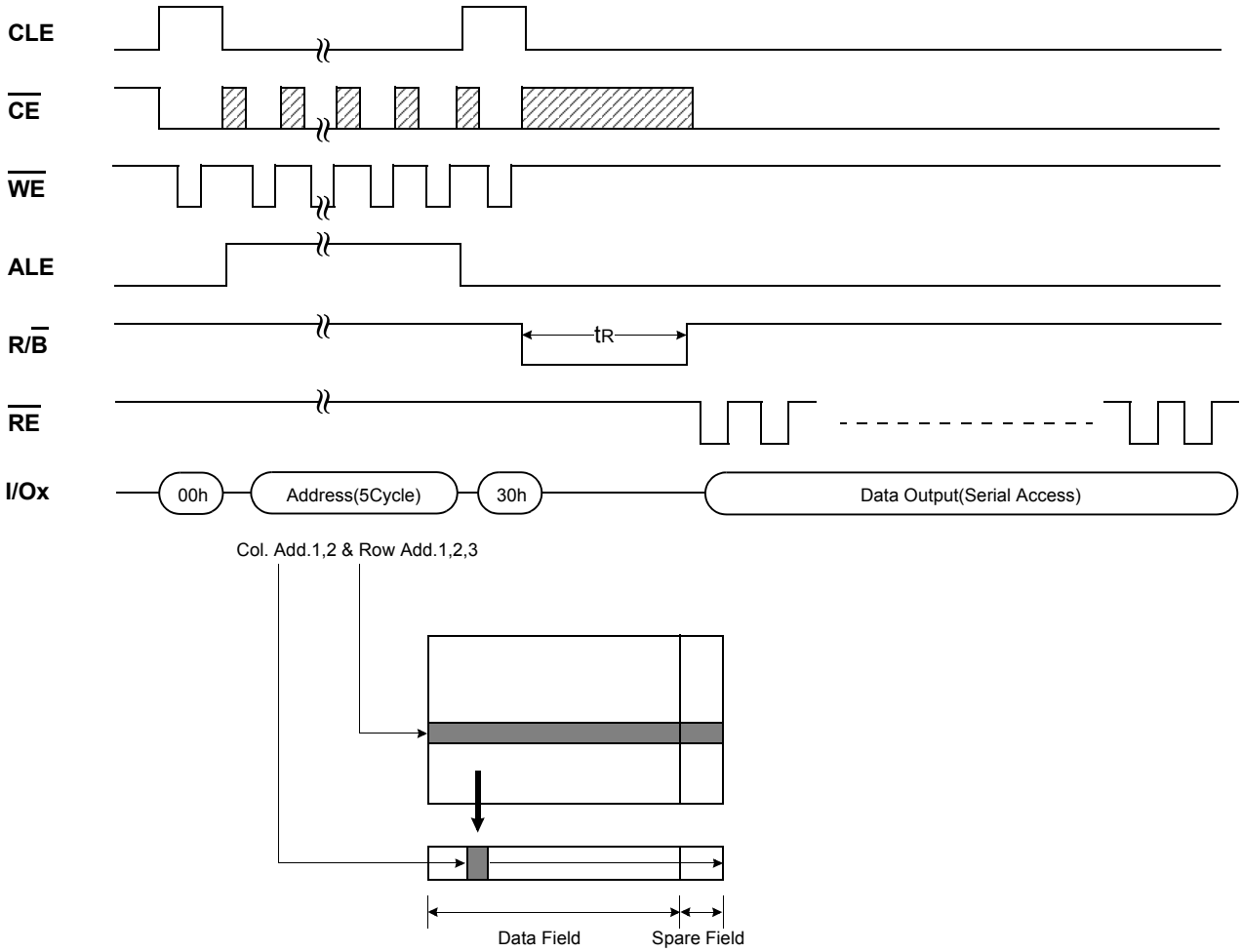

Figure 7. Random Data Output In a Page

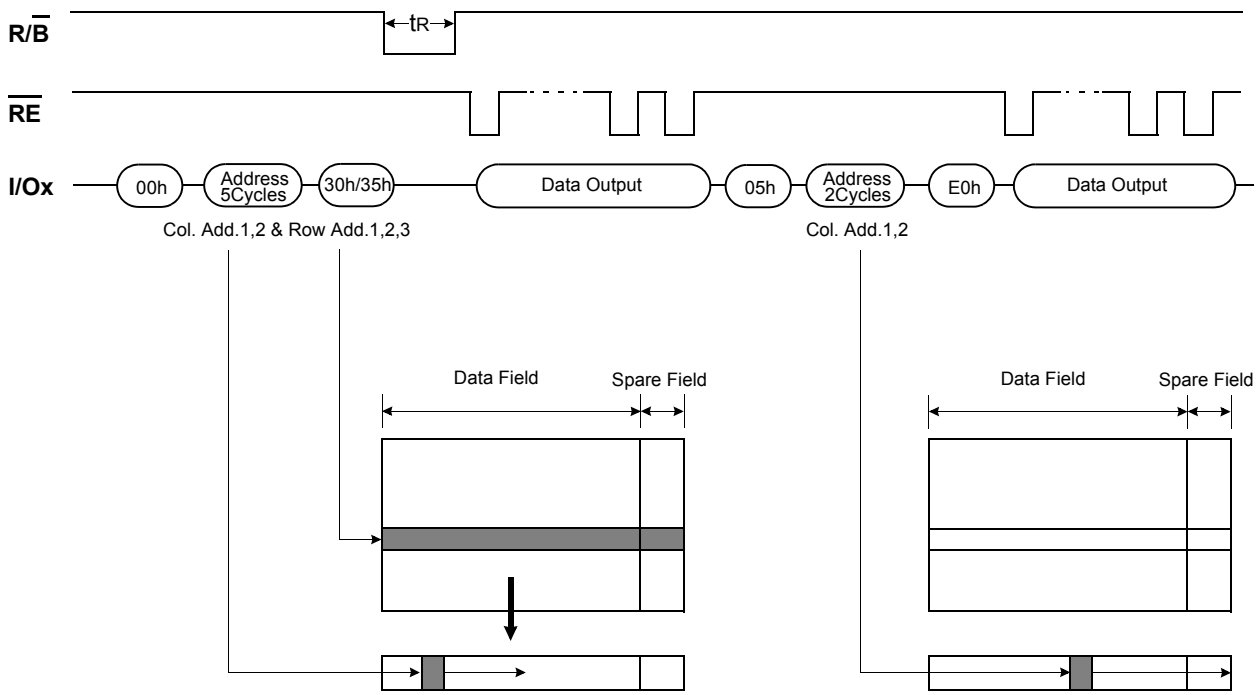

PAGE PROGRAM

The device is programmed basically on a page basis, but it does allow multiple partial page programming of a word or consecutive bytes up to 4,224, in a single page program cycle. The number of consecutive partial page programming operation within the same page without an intervening erase operation must not exceed 4 times for a single page. The addressing should be done in sequential order in a block. A page program cycle consists of a serial data loading period in which up to 4,224bytes of data may be loaded into the data register, followed by a non-volatile programming period where the loaded data is programmed into the appropriate cell.
The serial data loading period begins by inputting the Serial Data Input command(80h), followed by the five cycle address inputs and then serial data loading. The data other than those to be programmed do not need to be loaded. The device supports random data input in a page. The column address for the next data, which will be entered, may be changed to the address which follows random data input command(85h). Random data input may be operated multiple times regardless of how many times it is done in a page. **Modifying the data of a sector by Random Data Input before Copy-Back Program must be performed for the whole sector and is allowed only once per each sector. Any partial modification smaller than a sector corrupts the on-chip EDC codes.**
The Page Program confirm command(10h) initiates the programming process. Writing 10h alone without previously entering the serial data will not initiate the programming process. The internal write state controller automatically executes the algorithms and timings necessary for program and verify, thereby freeing the system controller for other tasks. Once the program process starts, the Read Status Register command may be entered to read the status register. The system controller can detect the completion of a program cycle by monitoring the R/$\overline{B}$ output, or the Status bit(I/O 6) of the Status Register. Only the Read Status command and Reset command are valid while programming is in progress. When the Page Program is complete, the Write Status Bit(I/O 0) may be checked(Figure 8). The internal write verify detects only errors for "1"s that are not successfully programmed to "0"s. The command register remains in Read Status command mode until another valid command is written to the command register.

Figure 8. Program & Read Status Operation

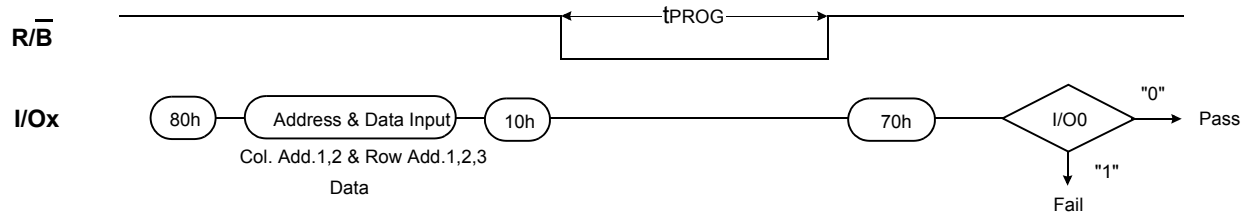

Figure 9. Random Data Input In a Page

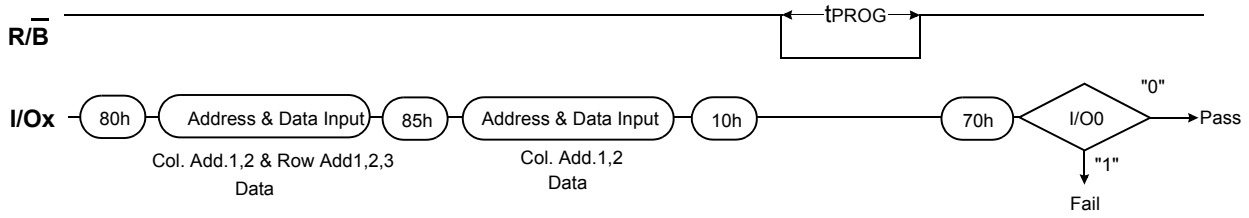

COPY-BACK PROGRAM

The Copy-Back program is configured to quickly and efficiently rewrite data stored in one page without utilizing an external memory. Since the time-consuming cycles of serial access and re-loading cycles are removed, the system performance is improved. The benefit is especially obvious when a portion of a block is updated and the rest of the block also need to be copied to the newly assigned free block. The operation for performing a copy-back program is a sequential execution of page-read without serial access and copying-program with the address of destination page. A read operation with "35h" command and the address of the source page moves the whole 4,224-byte data into the internal data buffer. As soon as the device returns to Ready state, Page-Copy Data-input command (85h) with the address cycles of destination page followed may be written. The Program Confirm command (10h) is required to actually begin the programming operation. During tPROG, the device executes EDC of itself. Once the program process starts, the Read Status Register command (70h/F1h) or Read EDC Status command (7Bh) may be entered to read the status register. The system controller can detect the completion of a program cycle by monitoring the R/$\overline{B}$ output, or the Status bit(I/O 6) of the Status Register. When the Copy-Back Program is complete, the Write Status Bit(I/O 0) and EDC Status Bits (I/O 1 ~ I/O 2) may be checked(Figure 10 & Figure 11& Figure 12). The internal write verification detects only errors for "1"s that are not successfully programmed to "0"s and the internal EDC checks whether there is only 1-bit error for each 528-byte sector of the source page. More than 2-bit error detection is not available for each 528-byte sector. The command register remains in Read Status commands mode or Read EDC Status command mode until another valid command is written to the command register.
During copy-back program, data modification is possible using random data input command (85h) as shown in Figure11. But EDC status bits are not available during copy back for some bits or bytes modified by Random Data Input operation.
However, in case of the 528 byte sector unit modification, EDC status bits are available.

Figure 10. Page Copy-Back Program Operation

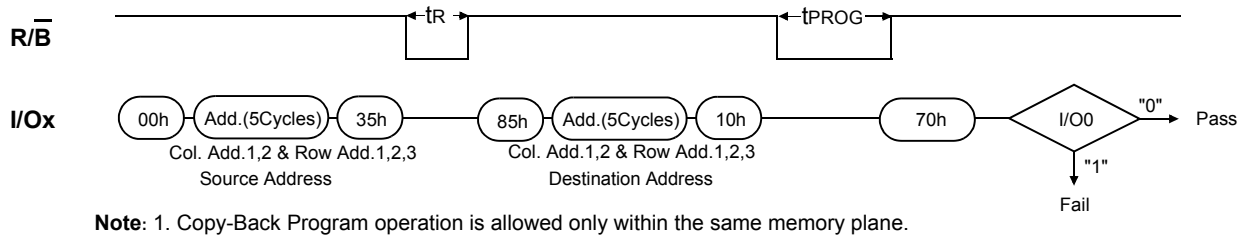

Note: 1. Copy-Back Program operation is allowed only within the same memory plane.

Figure 11. Page Copy-Back Program Operation with Random Data Input

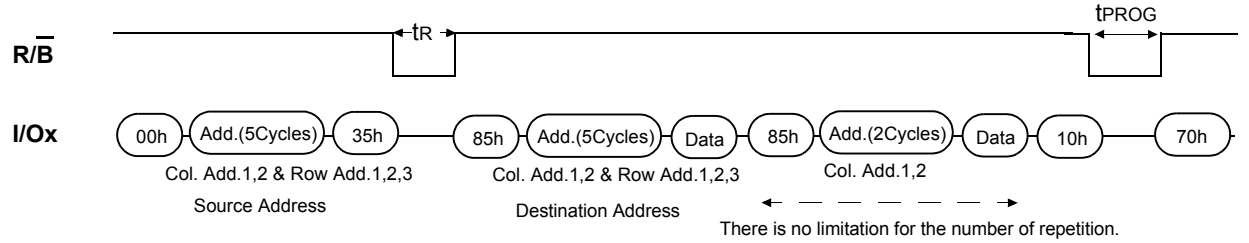

Note: 1. For EDC operation, only one time random data input is possible at the same address.

EDC OPERATION

Note that for the user who use Copy-Back with EDC mode, only one time random data input is possible at the same address during Copy-Back program or page program mode. For the user who use Copy-Back without EDC, there is no limitation for the random data input at the same address.

Figure 12. Page Copy-Back Program Operation with EDC & Read EDC Status

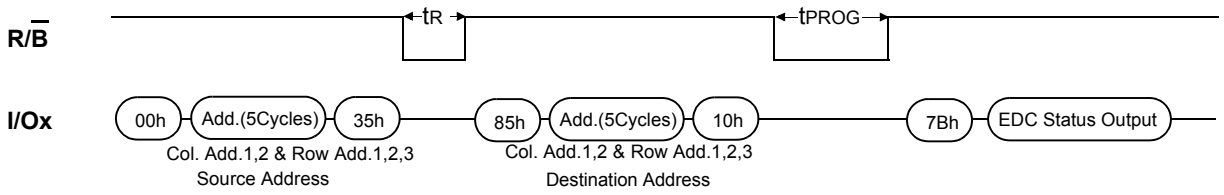

Figure 13. Two-Plane Page Copy-Back Program Operation with EDC & Read EDC Status

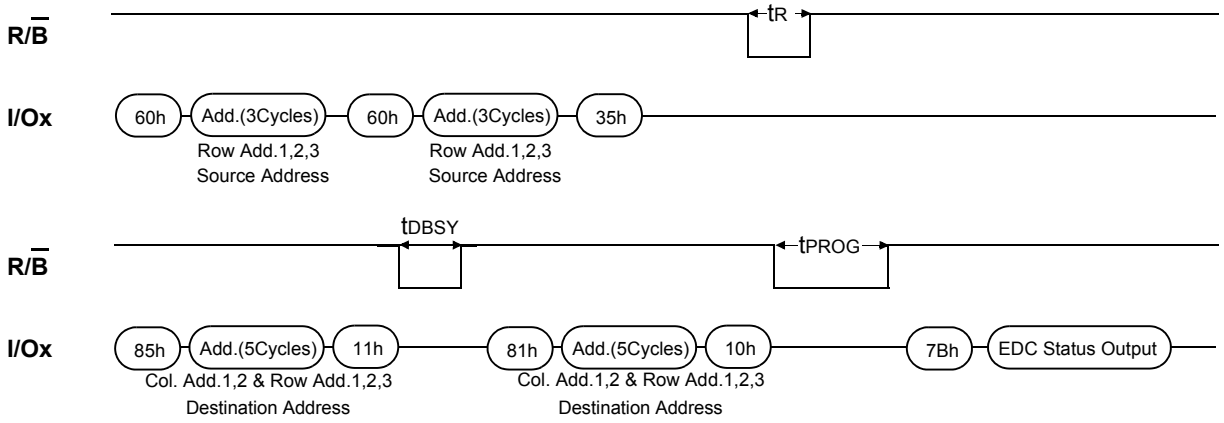

BLOCK ERASE

The Erase operation is done on a block basis. Block address loading is accomplished in three cycles initiated by an Erase Setup command(60h). Only address A_{19} to A_{30} is valid while A_{13} to A_{18} is ignored. The Erase Confirm command(D0h) following the block address loading initiates the internal erasing process. This two-step sequence of setup followed by execution command ensures that memory contents are not accidentally erased due to external noise conditions.
At the rising edge of $\overline{WE}$ after the erase confirm command input, the internal write controller handles erase and erase-verify. When the erase operation is completed, the Write Status Bit(I/O 0) may be checked. Figure 14 details the sequence.

Figure 14. Block Erase Operation

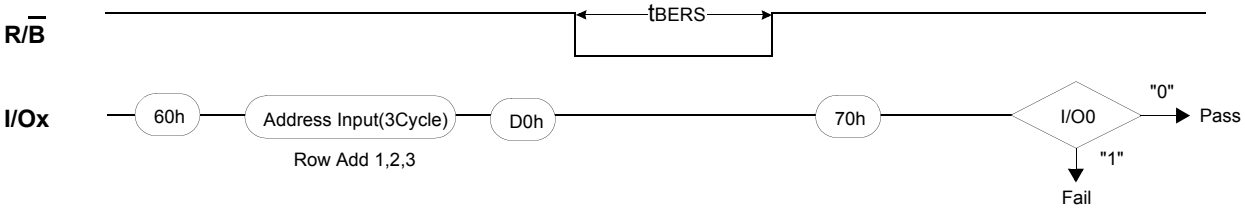

TWO-PLANE PAGE READ

Two-Plane Page Read is an extension of Page Read, for a single plane with 4,224 byte page registers. Since the device is equipped with two memory planes, activating the two sets of 4,224 byte page registers enables a random read of two pages. Two-Plane Page Read is initiated by repeating command 60h followed by three address cycles twice. In this case only same page of same block can be selected from each plane.

After Read Confirm command(30h) the 8,448 bytes of data within the selected two page are transferred to the data registers in less than 25us(tR). The system controller can detect the completion of data transfer(tR) by monitoring the output of R/B pin.

Once the data is loaded into the data registers, the data output of first plane can be read out by issuing command 00h with Five Address Cycles, command 05h with two column address and finally E0h. The data output of second plane can be read out using the identical command sequences. The restrictions for Two-Plane Page Program are shown in Figure 15. Two-Plane Read must be used in the block which has been programmed with Two-Plane Page Program.

Figure 15. Two-Plane Page Read Operation with Two-Plane Random Data Out

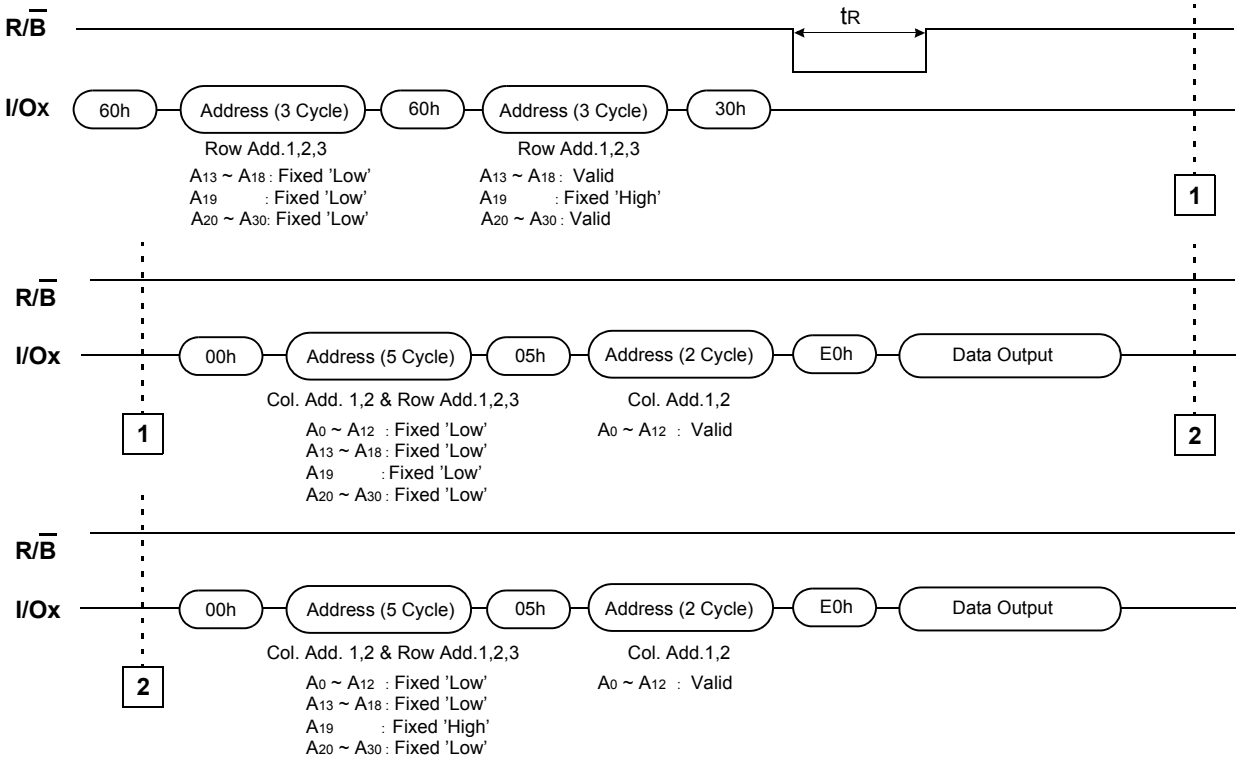

TWO-PLANE PAGE PROGRAM

Two-Plane Page Program is an extension of Page Program, for a single plane with 4,224 byte page registers. Since the device is equipped with two memory planes, activating the two sets of 4,224 byte page registers enables a simultaneous programming of two pages.

After writing the first set of data up to 4,224 byte into the selected page register, Dummy Page Program command (11h) instead of actual Page Program command (10h) is inputted to finish data-loading of the first plane. Since no programming process is involved, R/$\overline{B}$ remains in Busy state for a short period of time(tDBSY). Read Status command (70h/F1h) may be issued to find out when the device returns to Ready state by polling the Ready/Busy status bit(I/O 6). Then the next set of data for the other plane is inputted after the 81h command and address sequences. After inputting data for the last plane, actual True Page Program(10h) instead of dummy Page Program command (11h) must be followed to start the programming process. The operation of R/$\overline{B}$ and Read Status is the same as that of Page Program. Althougth two planes are programmed simultaneously, pass/fail is not available for each page when the program operation completes. Status bit of I/O 0 is set to "1" when any of the pages fails.

Restriction in addressing with Two-Plane Page Program is shown is Figure16.

Figure 16. Two-Plane Page Program

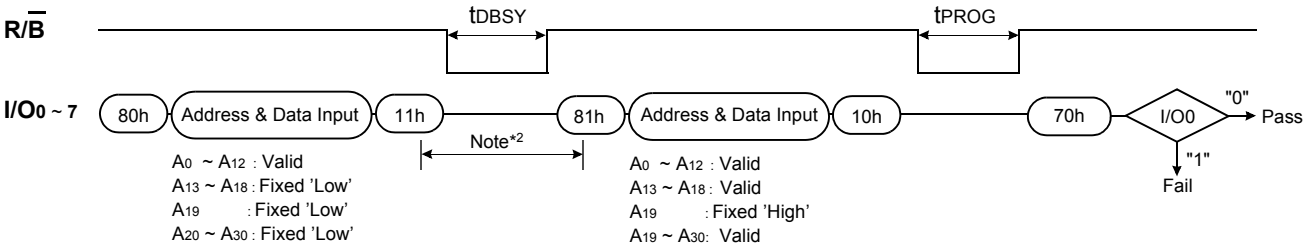

NOTE :1. It is noticeable that same row address except for A_{18} is applied to the two blocks
2. Any command between 11h and 81h is prohibited except 70h/F1h and FFh.

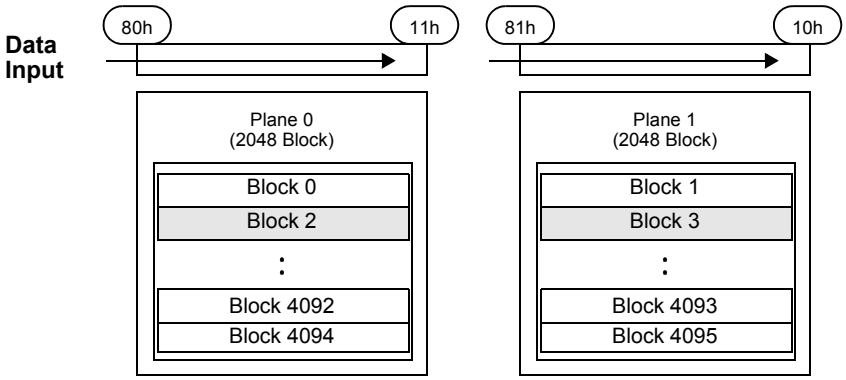

TWO-PLANE COPY-BACK PROGRAM

Two-Plane Copy-Back Program is an extension of Copy-Back Program, for a single plane with 4,224 byte page registers. Since the device is equipped with two memory planes, activating the two sets of 4,224 byte page registers enables a simultaneous programming of two pages.

Figure 17. Two-Plane Copy-Back Program Operation

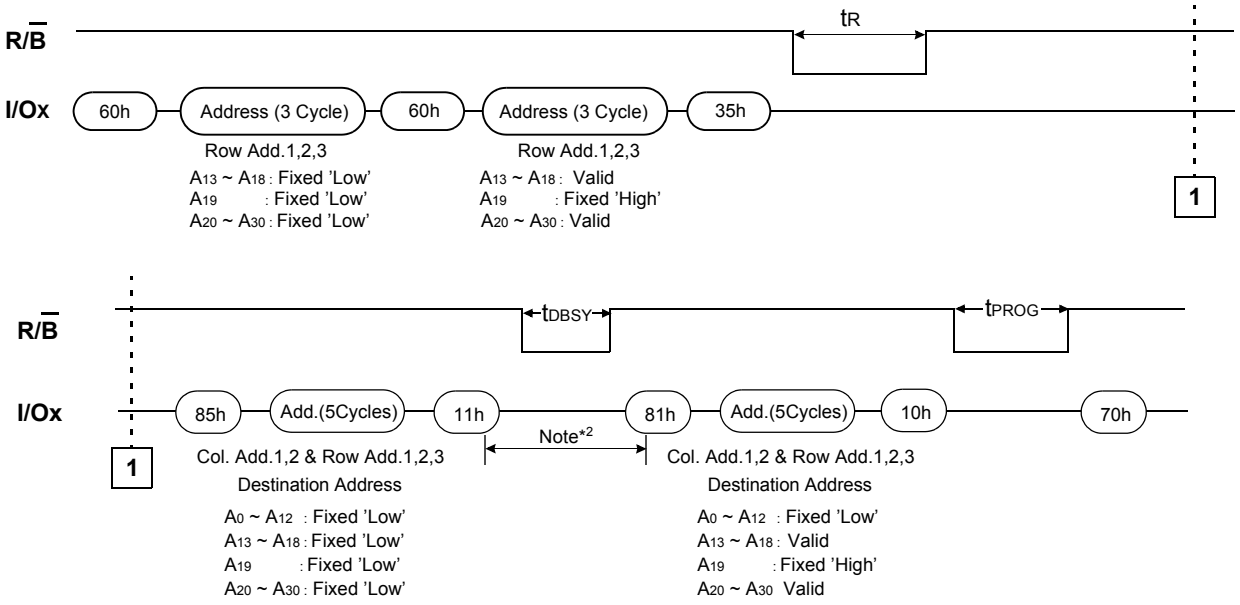

Note: 1. Copy-Back Program operation is allowed only within the same memory plane.
2. Any command between 11h and 81h is prohibited except 70h/F1h and FFh.

Figure 18. Two-Plane Copy-Back Program Operation with Random Data Input

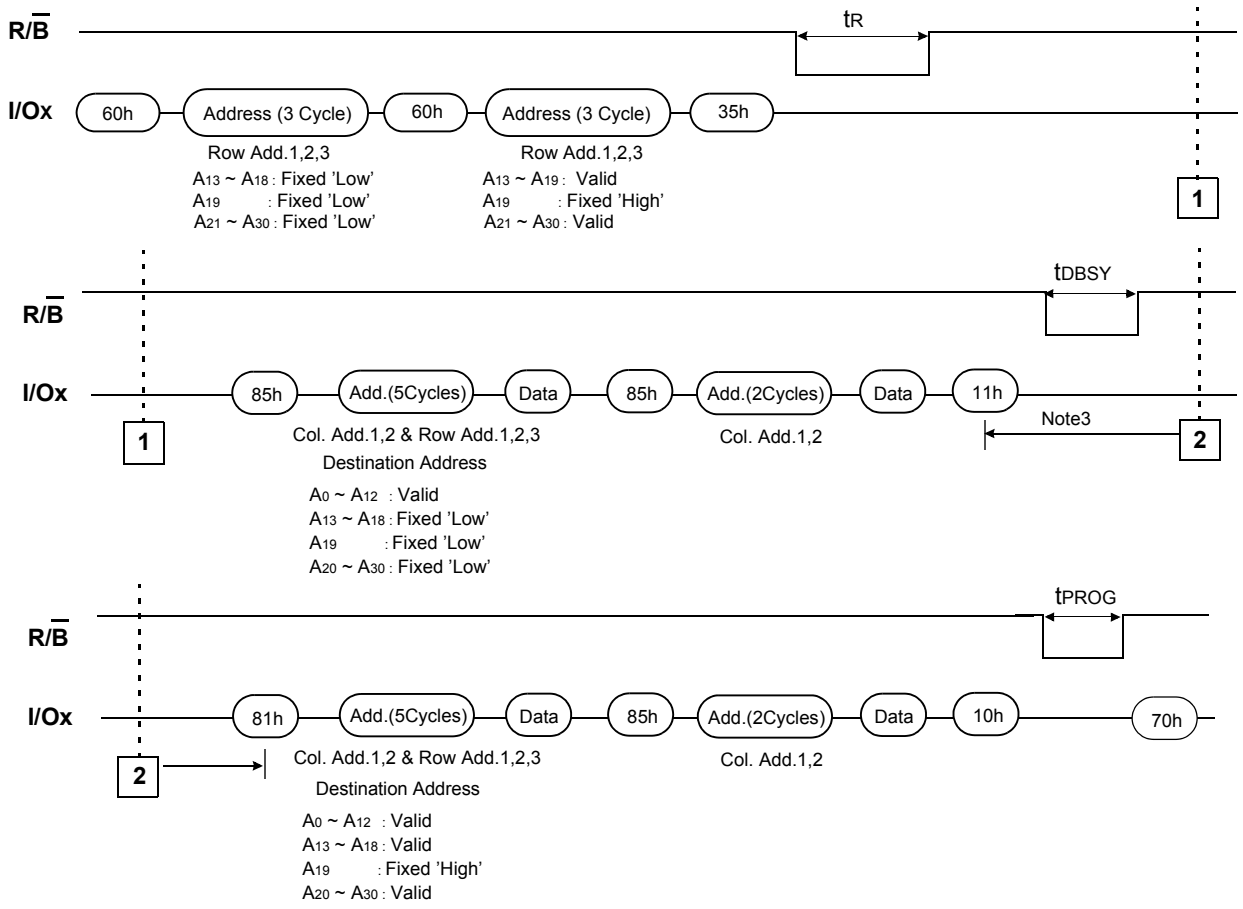

Note: 1. Copy-Back Program operation is allowed only within the same memory plane.
2. EDC status Bits are not available during copy back for some bits or bytes modified by Random Data Input operation. In case of the 528 byte plane unit modification, EDC status bits are available.
3. Any command between 11h and 81h is prohibited except 70h/F1h and FFh.

TWO-PLANE BLOCK ERASE

Basic concept of Two-Plane Block Erase operation is identical to that of Two-Plane Page Program. Up to two blocks, one from each plane can be simultaneously erased. Standard Block Erase command sequences (Block Erase Setup command(60h) followed by three address cycles) may be repeated up to twice for erasing up to two blocks. Only one block should be selected from each plane. The Erase Confirm command(D0h) initiates the actual erasing process. The completion is detected by monitoring R/$\overline{B}$ pin or Ready/Busy status bit (I/O 6).

Figure 19. Two-Plane Block Erase Operation

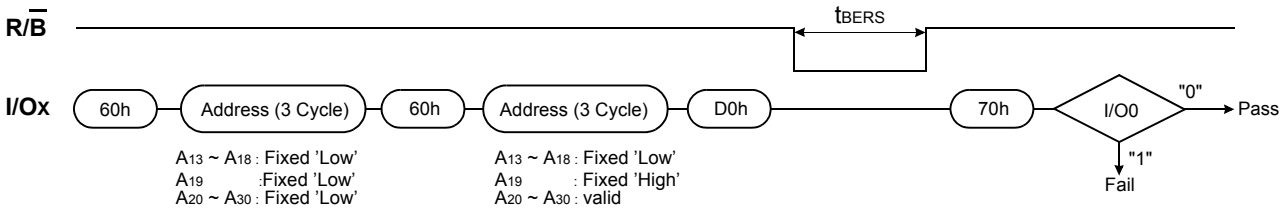

READ STATUS

The device contains a Status Register which may be read to find out whether program or erase operation is completed, and whether the program or erase operation is completed successfully. After writing 70h or F1h command to the command register, a read cycle outputs the content of the Status Register to the I/O pins on the falling edge of $\overline{CE}$ or $\overline{RE}$, whichever occurs last. This two line control allows the system to poll the progress of each device in multiple memory connections even when R/$\overline{B}$ pins are common-wired. $\overline{RE}$ or $\overline{CE}$ does not need to be toggled for updated status. Refer to Table 3 for specific Status Register definitions. The command register remains in Status Read mode until further commands are issued to it. Therefore, if the status register is read during a random read cycle, the read command(00h) should be given before starting read cycles.

Table 3. Status Register Definition for 70h Command

I/O	Page Program	Block Erase	Read	Definition	
I/O 0	Pass/Fail	Pass/Fail	Not use	Pass : "0"	Fail : "1"
I/O 1	Not use	Not use	Not use	Don't -cared	
I/O 2	Not use	Not use	Not use	Don't -cared	
I/O 3	Not Use	Not Use	Not Use	Don't -cared	
I/O 4	Not Use	Not Use	Not Use	Don't -cared	
I/O 5	Not Use	Not Use	Not Use	Don't -cared	
I/O 6	Ready/Busy	Ready/Busy	Ready/Busy	Busy : "0"	Ready : "1"
I/O 7	Write Protect	Write Protect	Write Protect	Protected : "0"	Not Protected : "1"

NOTE : 1. I/Os defined 'Not use' are recommended to be masked out when Read Status is being executed.

Table 4. F1h Read Status Register Definition

I/O No.	Page Program	Block Erase	Read	Definition	
I/O 0	Chip Pass/Fail	Chip Pass/Fail	Not use	Pass : "0"	Fail : "1"
I/O 1	Plane0 Pass/Fail	Plane0 Pass/Fail	Not use	Pass : "0"	Fail : "1"
I/O 2	Plane1 Pass/Fail	Plane1 Pass/Fail	Not use	Pass : "0"	Fail : "1"
I/O 3	Not Use	Not Use	Not Use	Don't -cared	
I/O 4	Not Use	Not Use	Not Use	Don't -cared	
I/O 5	Not Use	Not Use	Not Use	Don't -cared	
I/O 6	Ready/Busy	Ready/Busy	Ready/Busy	Busy : "0"	Ready : "1"
I/O 7	Write Protect	Write Protect	Write Protect	Protected : "0"	Not Protected : "1"

NOTE : 1. I/Os defined 'Not use' are recommended to be masked out when Read Status is being executed.

READ EDC STATUS

Read EDC status operation is only available on 'Copy Back Program'. The device contains an EDC Status Register which may be read to find out whether there is error during 'Read for Copy Back'. After writing 7Bh command to the command register, a read cycle outputs the content of the EDC Status Register to the I/O pins on the falling edge of $\overline{CE}$ or $\overline{RE}$, whichever occurs last. This two line control allows the system to poll the progress of each device in multiple memory connections even when R/$\overline{B}$ pins are common-wired. $\overline{RE}$ or $\overline{CE}$ does not need to be toggled for updated status. Refer to Table 5 for specific Status Register definitions. The command register remains in EDC Status Read mode until further commands are issued to it.

Table 5. Status Register Definition for 7Bh Command

I/O	Copy Back Program	Page Program	Block Erase	Read	Definition
I/O 0	Pass/Fail of Copy Back Program	Pass/Fail	Pass/Fail	Not use	Pass : "0", Fail : "1"
I/O 1	EDC Status	Not use	Not use	Not use	No Error : "0", Error : "1"
I/O 2	Validity of EDC Status	Not use	Not use	Not use	Valid : "1", Invalid : "0"
I/O 3	Not Use	Not Use	Not Use	Not Use	Don't -cared
I/O 4	Not Use	Not Use	Not Use	Not Use	Don't -cared
I/O 5	Not Use	Not Use	Not Use	Not Use	Don't -cared
I/O 6	Ready/Busy of Copy Back Program	Ready/Busy	Ready/Busy	Ready/Busy	Busy : "0", Ready : "1"
I/O 7	Write Protect of Copy Back Program	Write Protect	Write Protect	Write Protect	Protected : "0", Not Protected :"1"

NOTE : 1. I/Os defined 'Not use' are recommended to be masked out when Read Status is being executed.
2. More than 2-bit error detection isn't available for each 528 Byte sector.
That is to say, only 1-bit error detection is avaliable for each 528 Byte sector.

READ ID

The device contains a product identification mode, initiated by writing 90h to the command register, followed by an address input of 00h. Five read cycles sequentially output the manufacturer code(ECh), and the device code and 3rd, 4th, 5th cycle ID respectively. The command register remains in Read ID mode until further commands are issued to it. Figure 20 shows the operation sequence.

Figure 20. Read ID Operation

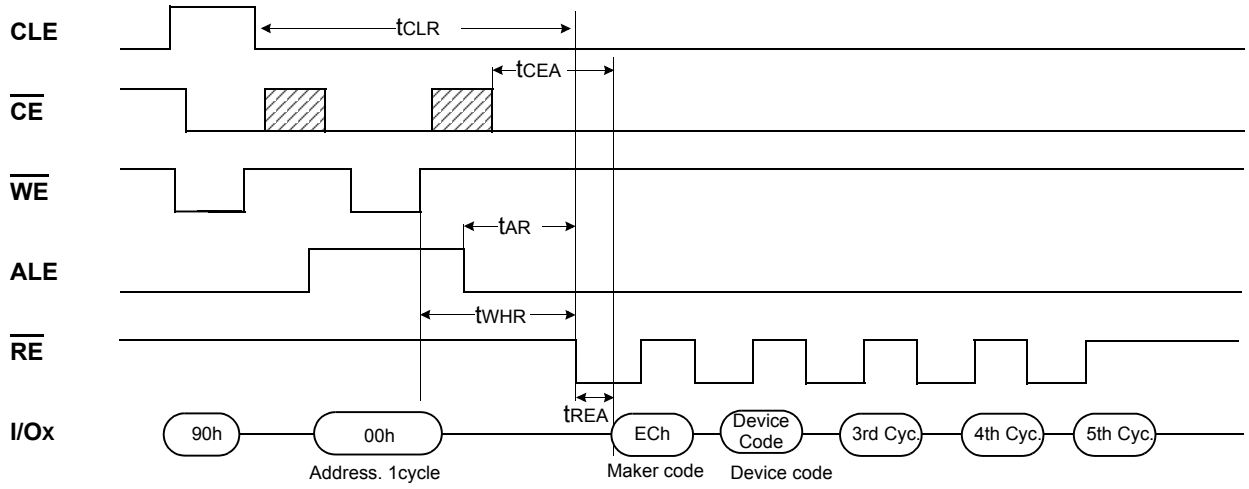

Device	Device Code (2nd Cycle)	3rd Cycle	4th Cycle	5th Cycle
K9F8G08B0M	Same as K9F8G08U0M			
K9F8G08U0M	D3	10h	A6h	64h

RESET

The device offers a reset feature, executed by writing FFh to the command register. When the device is in Busy state during random read, program or erase mode, the reset operation will abort these operations. The contents of memory cells being altered are no longer valid, as the data will be partially programmed or erased. The command register is cleared to wait for the next command, and the Status Register is cleared to value C0h when $\overline{WP}$ is high. If the device is already in reset state a new reset command will be accepted by the command register. The R/$\overline{B}$ pin changes to low for tRST after the Reset command is written. Refer to Figure 21 below.

Figure 21. Reset Operation

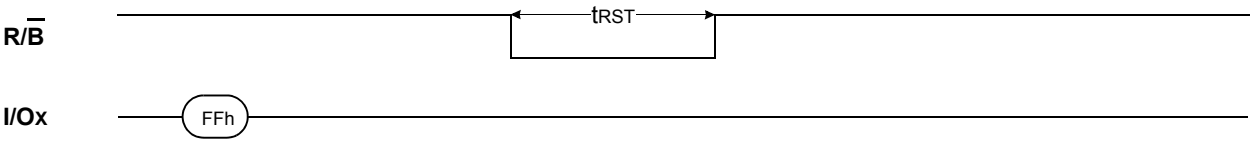

Table 6. Device Status

	After Power-up	After Reset
Operation mode	00h Command is latched	Waiting for next command

READY/$\overline{\text{BUSY}}$

The device has a R/$\overline{B}$ output that provides a hardware method of indicating the completion of a page program, erase and random read completion. The R/$\overline{B}$ pin is normally high but transitions to low after program or erase command is written to the command register or random read is started after address loading. It returns to high when the internal controller has finished the operation. The pin is an open-drain driver thereby allowing two or more R/$\overline{B}$ outputs to be Or-tied. Because pull-up resistor value is related to tr(R/$\overline{B}$) and current drain during busy(ibusy) , an appropriate value can be obtained with the following reference chart(Fig.22). Its value can be determined by the following guidance.

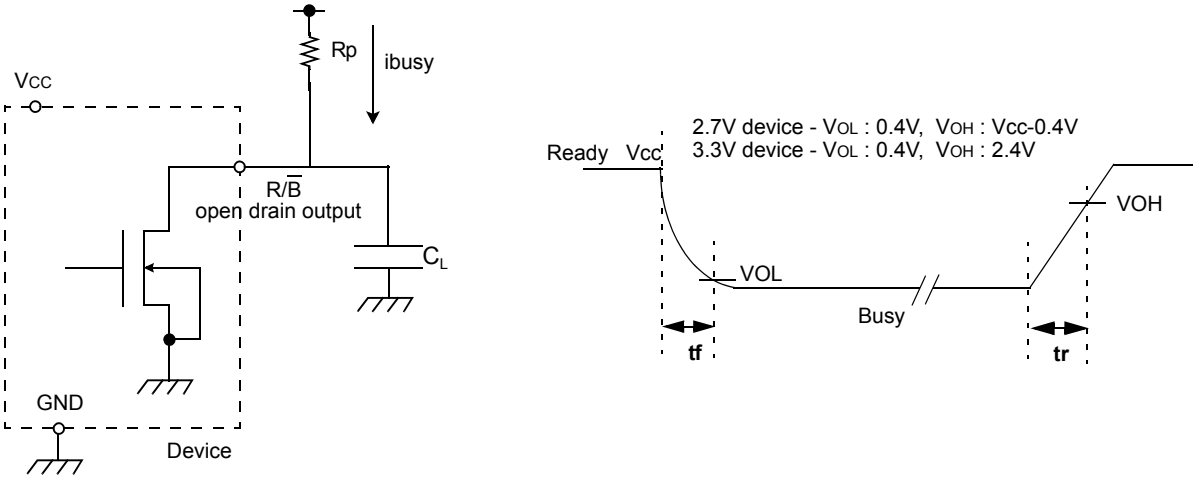

Figure 22. Rp vs tr ,tf & Rp vs ibusy

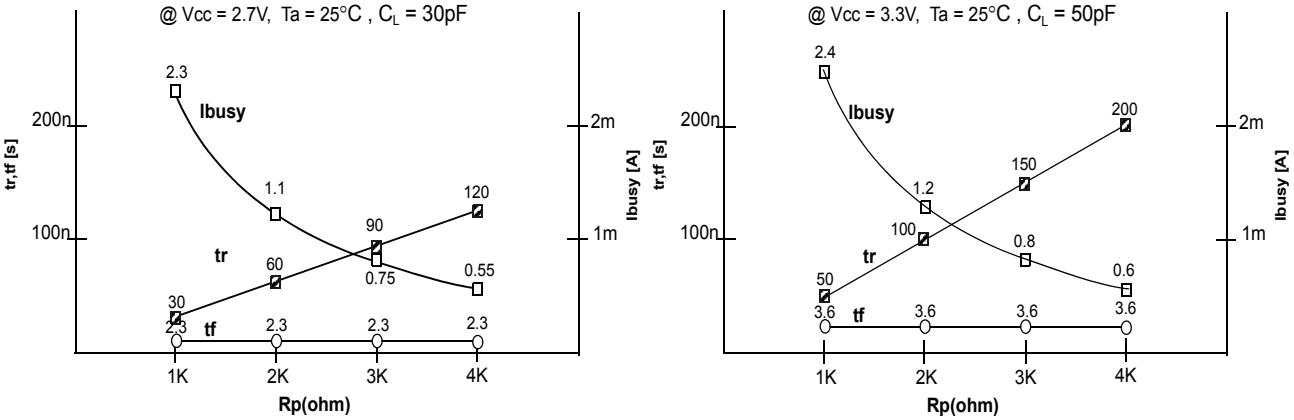

Rp value guidance

$$Rp(min, 2.7V\ part) = \frac{V_{CC}(Max.) - V_{OL}(Max.)}{I_{OL} + \Sigma I_L} = \frac{2.5V}{3mA + \Sigma I_L}$$

$$Rp(min, 3.3V\ part) = \frac{V_{CC}(Max.) - V_{OL}(Max.)}{I_{OL} + \Sigma I_L} = \frac{3.2V}{8mA + \Sigma I_L}$$

where I_L is the sum of the input currents of all devices tied to the R/$\overline{B}$ pin.
Rp(max) is determined by maximum permissible limit of tr

DATA PROTECTION & POWER UP SEQUENCE

The device is designed to offer protection from any involuntary program/erase during power-transitions. An internal voltage detector disables all functions whenever Vcc is below about 1.8V(2.7V device), 2V(3.3V device). $\overline{WP}$ pin provides hardware protection and is recommended to be kept at V_{IL} during power-up and power-down. A recovery time of minimum 100μs is required before internal circuit gets ready for any command sequences as shown in Figure 23. The two step command sequence for program/erase provides additional software protection.

Figure 23. AC Waveforms for Power Transition

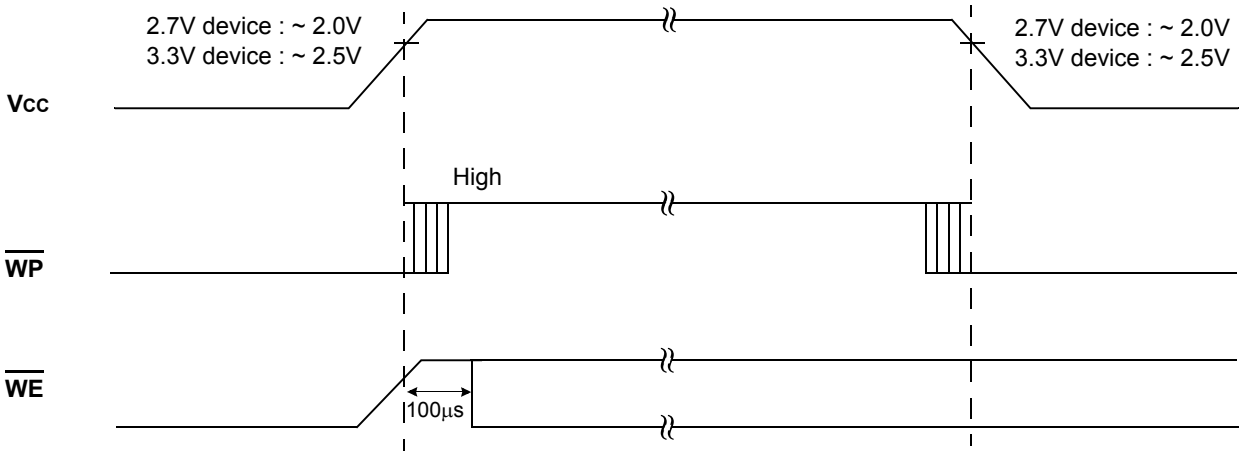

READ FOR COPY-BACK WITH DATA OUTPUT TIMING GUIDE

K9F8G08X0M is designed also to support the read for copy-back with data output to check a bit error for the controller which can't use the read EDC status operation. The command sequences are as follows.

Figure A-1. (Using Data Output) Page Copy-Back Program Operation

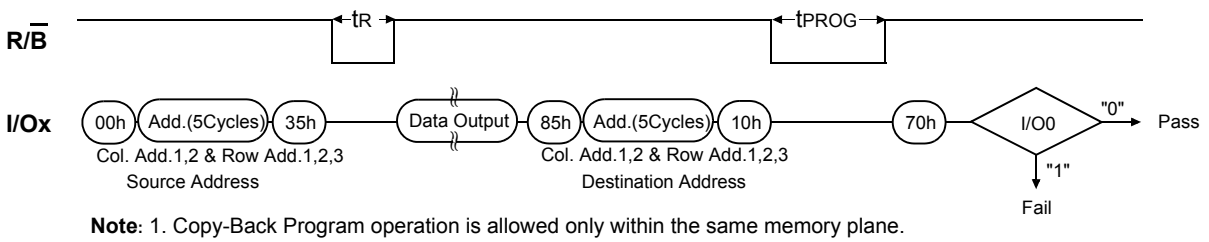

Note: 1. Copy-Back Program operation is allowed only within the same memory plane.

Figure A-2. (Using Data Output) Page Copy-Back Program Operation with Random Data Input

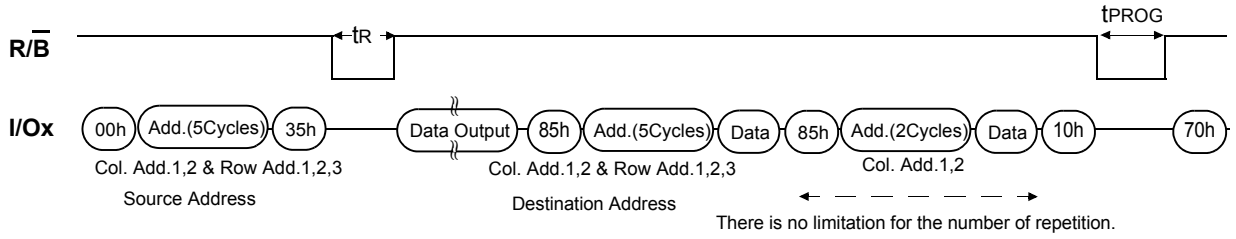

Figure A-3. (Using Data Output) Two-Plane Copy-Back Program Operation

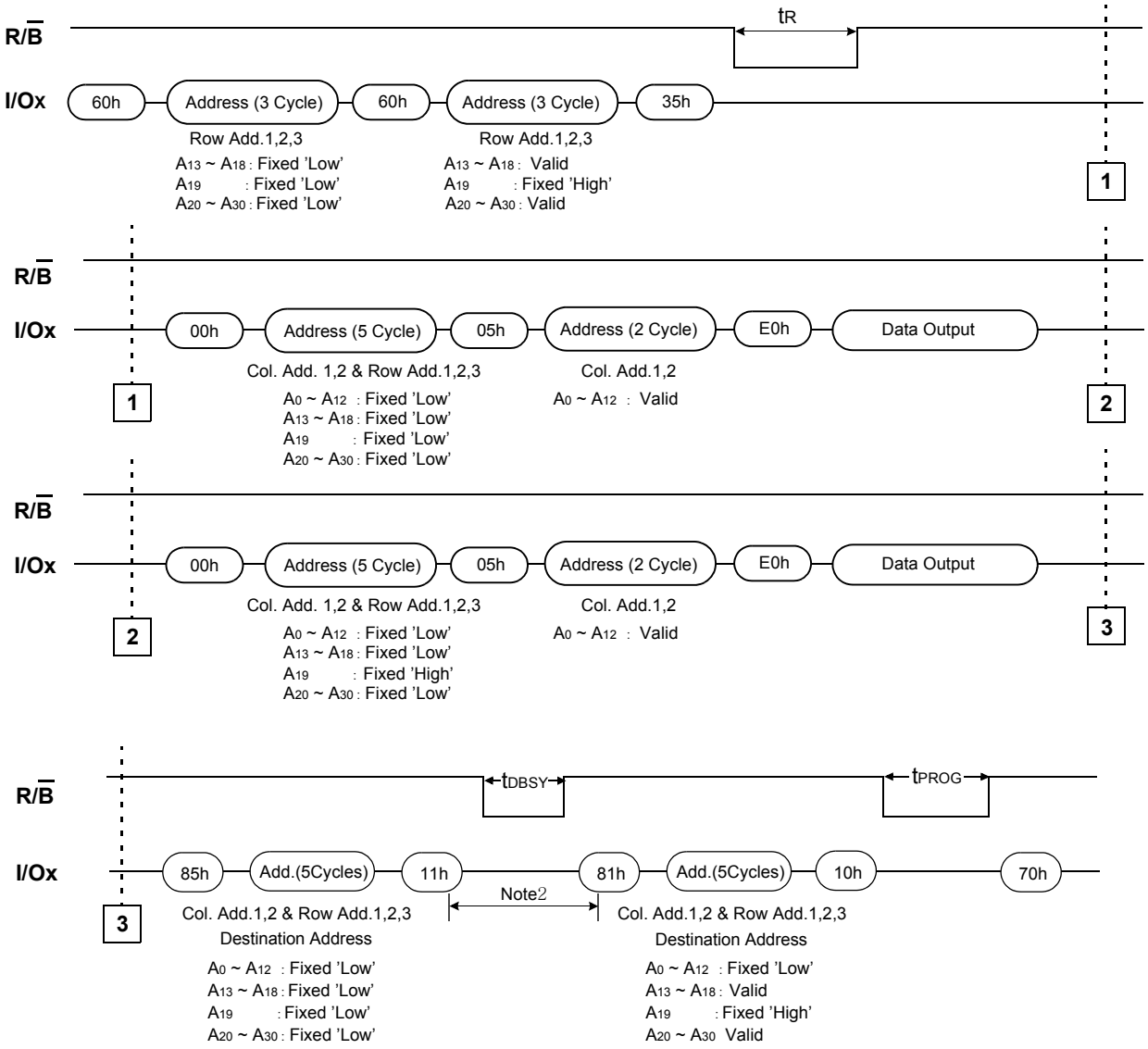

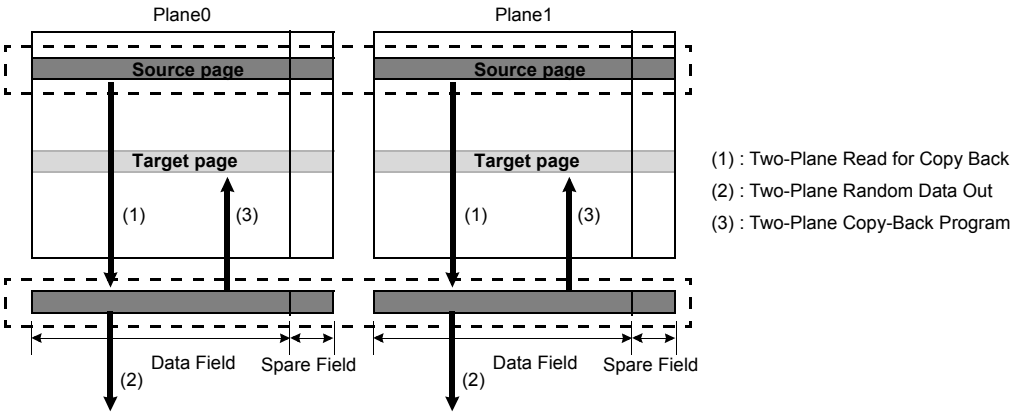

Note: 1. Copy-Back Program operation is allowed only within the same memory plane.
2. Any command between 11h and 81h is prohibited except 70h/F1h and FFh.

Figure A-4. (Using Data Output) Two-Plane Copy-Back Program Operation with Random Data Input

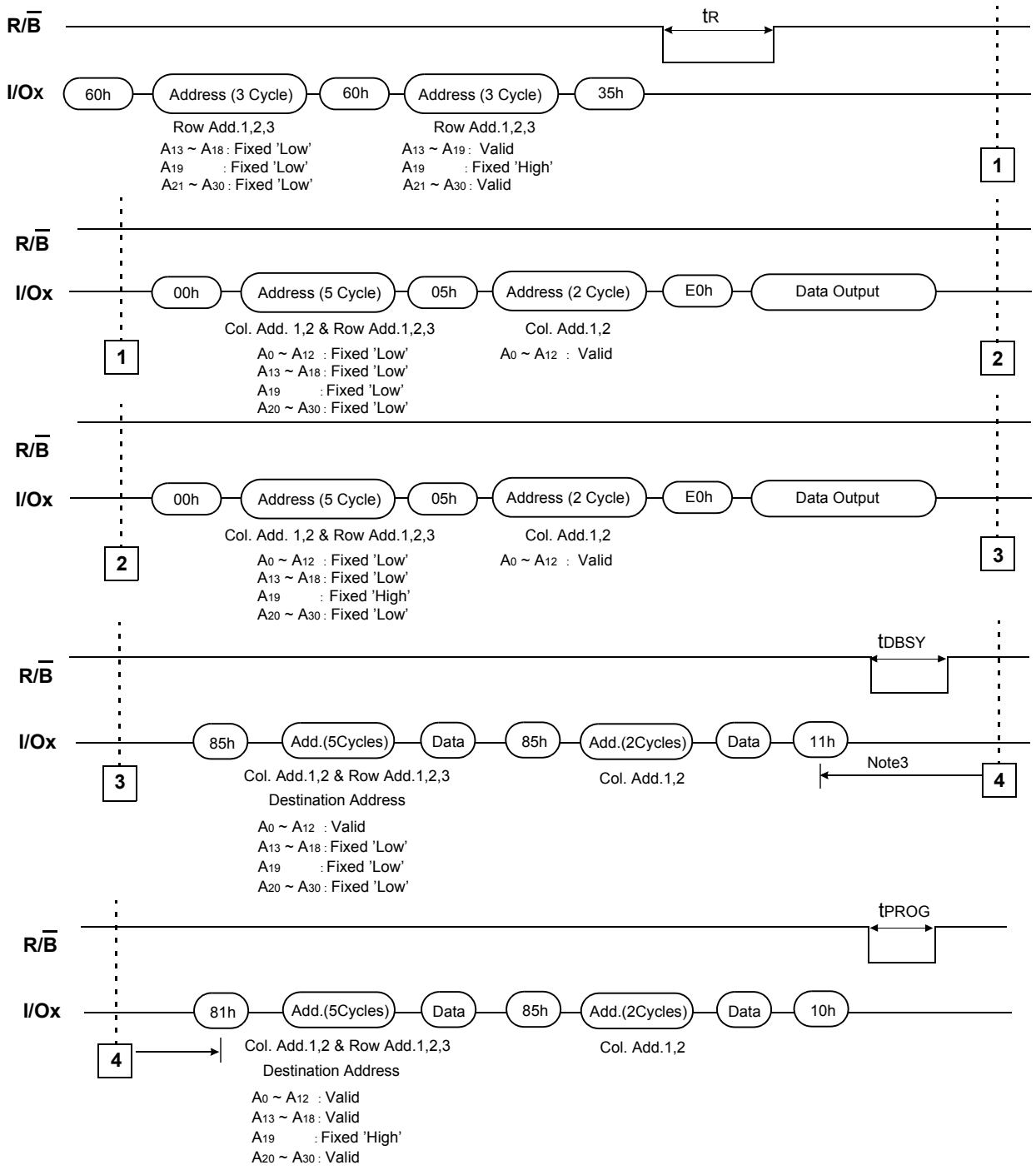

Note: 1. Copy-Back Program operation is allowed only within the same memory plane.
2. Any command between 11h and 81h is prohibited except 70h/F1h and FFh.

2KB PROGRAM OPERATION TIMING GUIDE

K9F8G08X0M is designed also to support the program operation with 2KByte data to offer the backward compatibility to the controller which uses the NAND with 2KByte page. The command sequences are as follows.

Figure B-1. (2KB X 2) Program Operation

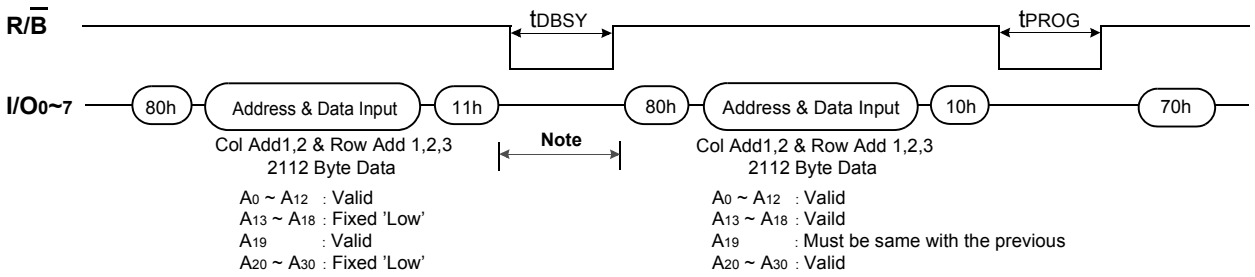

Note: Any command between 11h and 80h is prohibited except 70h/F1h and FFh.

Figure B-2. (2KB X 2) Copy-Back Program Operation

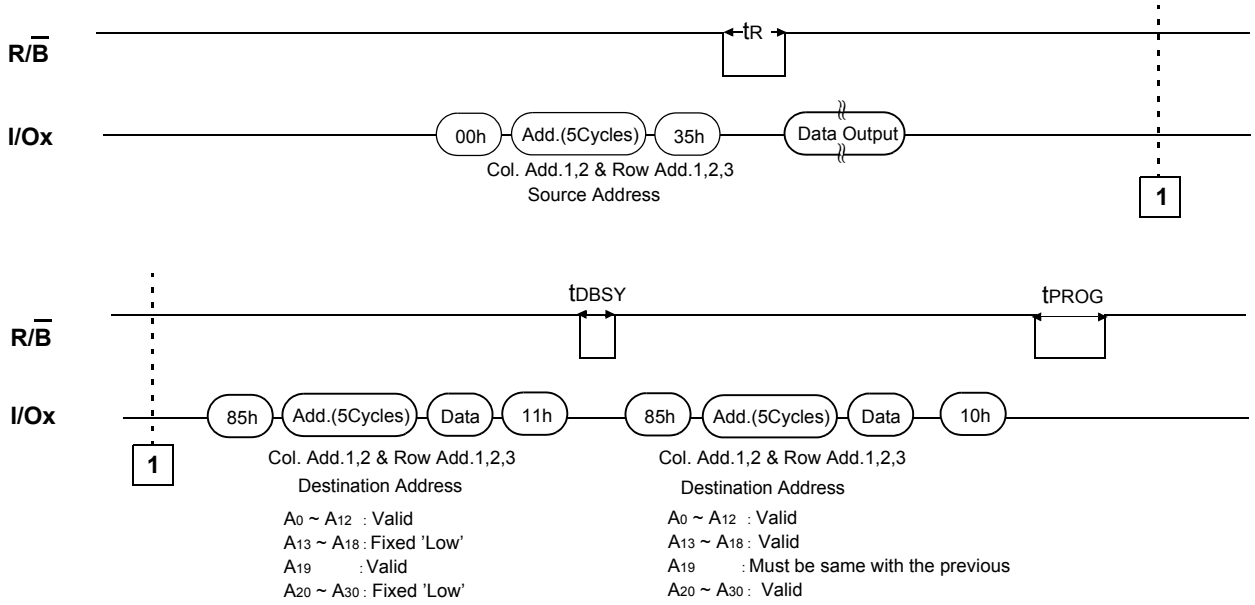

Note: 1. Copy-Back Program operation is allowed only within the same memory plane.
2. Any command between 11h and 85h is prohibited except 70h/F1h and FFh.

Figure B-3. (2KB X 2) Copy-Back Program Operation with Random Data Input

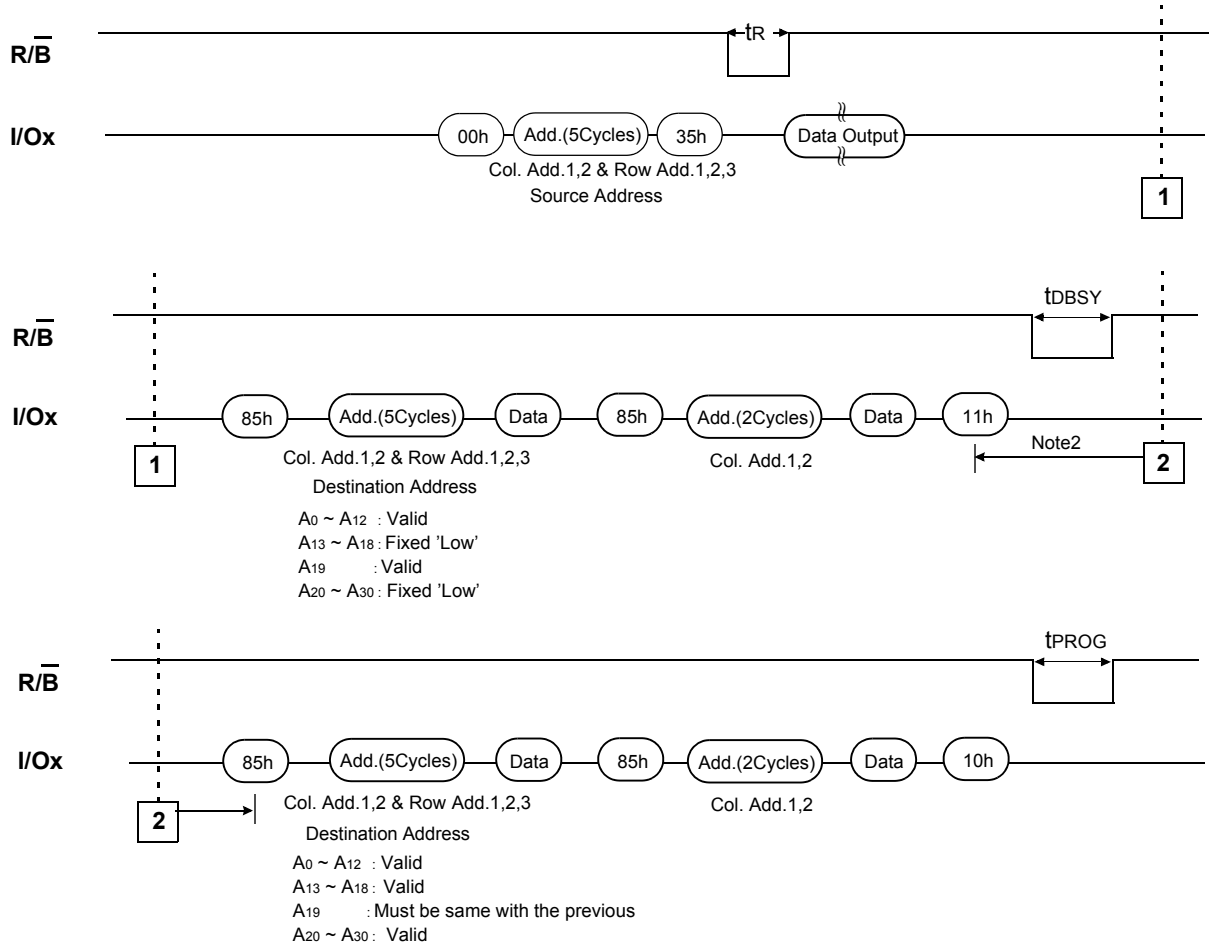

Note: 1. Copy-Back Program operation is allowed only within the same memory plane.
2. Any command between 11h and 85h is prohibited except 70h/F1h and FFh.

2-PLANE PAGE PROGRAM OPERATION USING 4KB BUFFER RAM

K9F8G08X0M consists of 4KB pages and can support Two-Plane program operation. The internal RAM requirement for a controller is 8KB, but for those controllers which support less than 8KB RAM, the following sequence can be used for Two-Plane program operation.

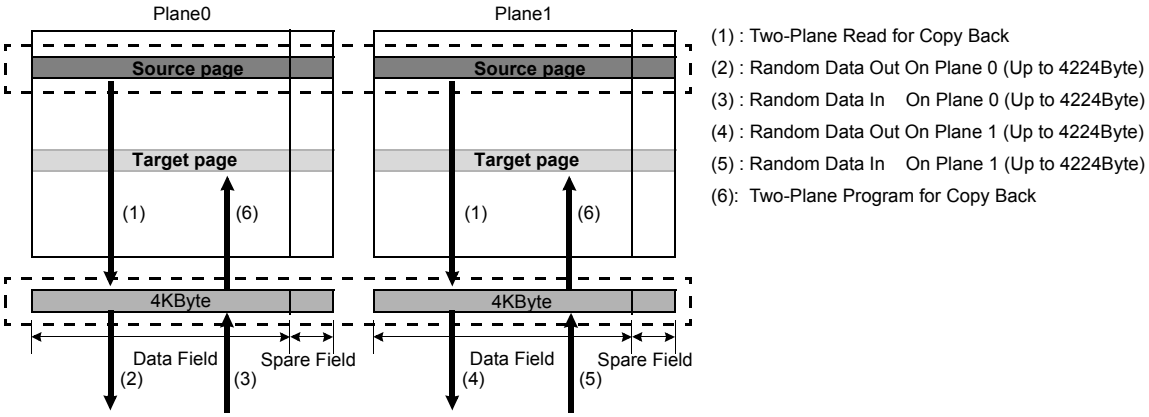

Figure B-4. 2-Plane Copy-Back Program Operation with Ramdon Data Input

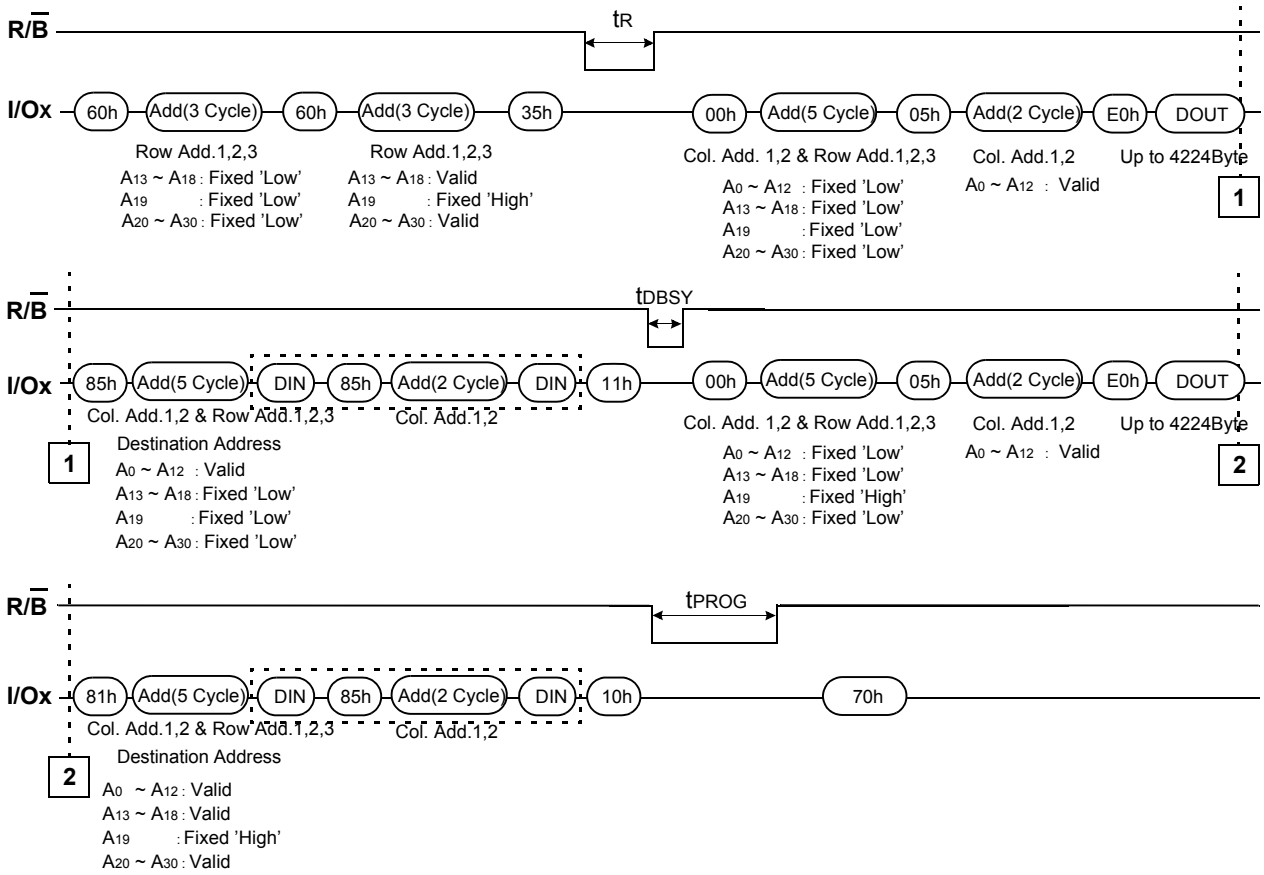

Note: 1. Copy-Back Program operation is allowed only within the same memory plane.

$\overline{WP}$ AC Timing guide

Enabling $\overline{WP}$ during erase and program busy is prohibited. The erase and program operations are enabled and disabled as follows:

Figure C-1. Program Operation

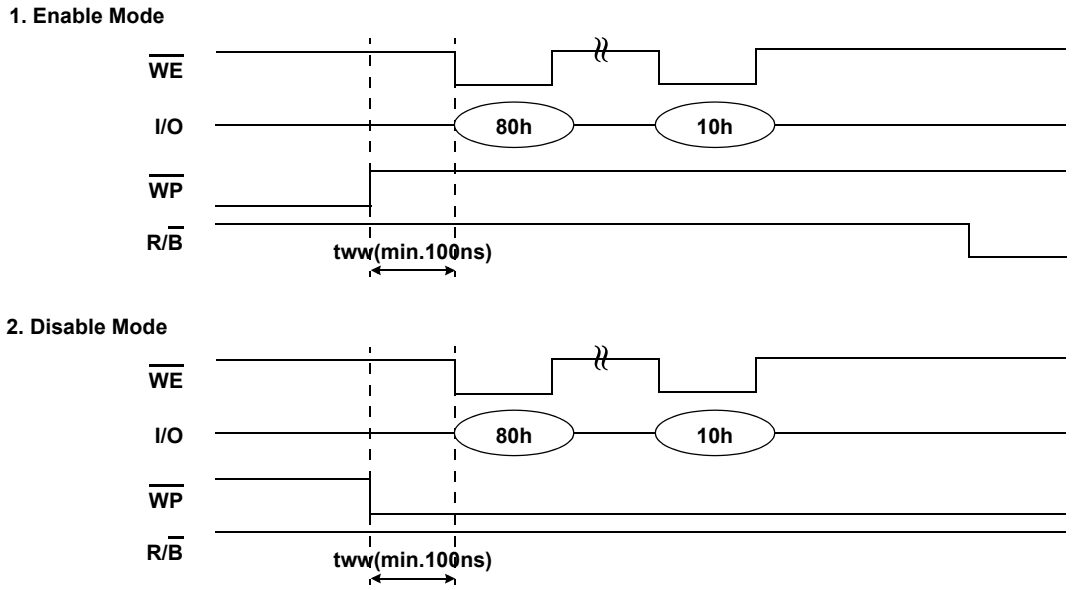
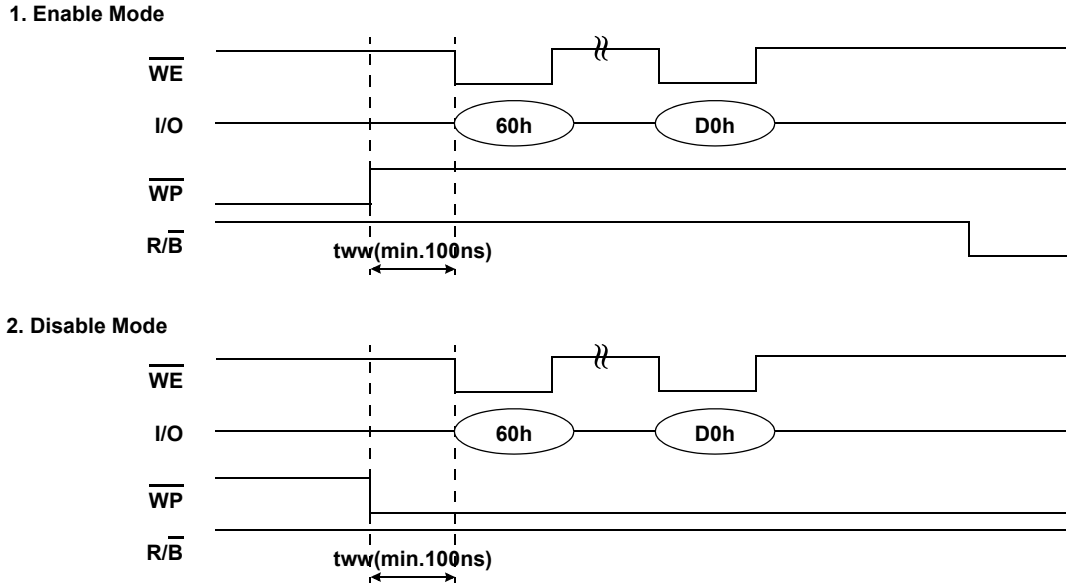
Figure C-2. Erase Operation