ANNEXE D6 - POWER SUPPLIES

SNSA TELECOMMUNICATIONS - 3750VA INVERTER: SHEET 5 (IC POWER SUPPLIES)

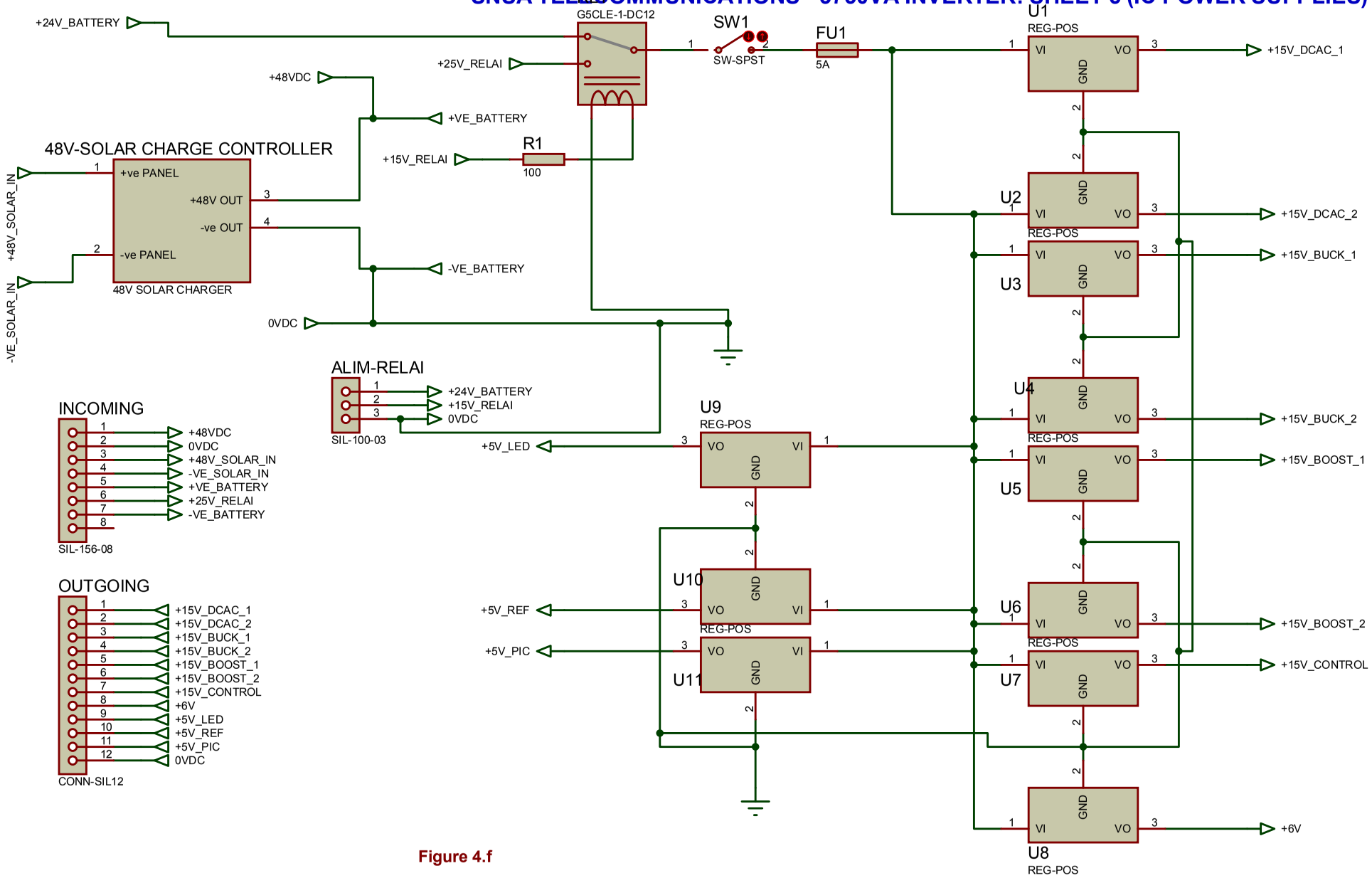

Figure 4.f