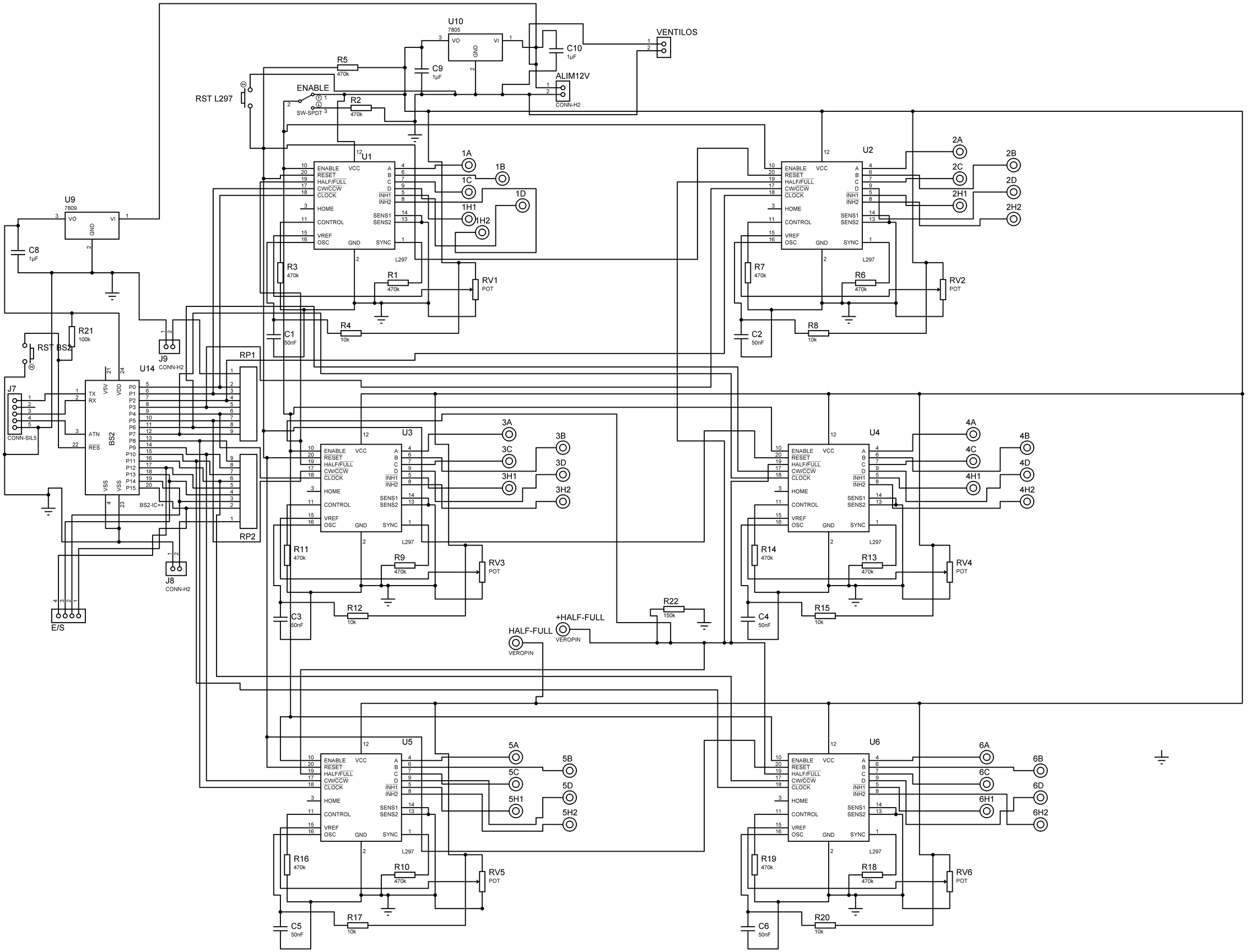
U10
7805
VO
VI
GND
C10
1µF
C9
1µF
VENTILOS
ALIM12V
CONN-H2
R5
470k
R2
470k
ENABLE
SW-SPDT
RST L297
U9
7809
C8
1µF
U1
U2
U3
U4
U5
U6
ENABLE
RESET
HALF/FULL
CW/CCW
CLOCK
HOME
CONTROL
VREF
OSC
VCC
GND
SYNC
SENS1
SENS2
INH1
INH2
L297
R1
470k
R3
470k
R4
10k
C1
50nF
RV1
POT
R6
470k
R7
470k
R8
10k
C2
50nF
RV2
POT
1A
1B
1C
1D
1H1
1H2
2A
2B
2C
2D
2H1
2H2
3A
3B
3C
3D
3H1
3H2
4A
4B
4C
4D
4H1
4H2
5A
5B
5C
5D
5H1
5H2
6A
6B
6C
6D
6H1
6H2
R9
470k
R11
470k
R12
10k
C3
50nF
RV3
POT
R13
470k
R14
470k
R15
10k
C4
50nF
RV4
POT
R10
470k
R16
470k
R17
10k
C5
50nF
RV5
POT
R18
470k
R19
470k
R20
10k
C6
50nF
RV6
POT
R22
150k
+HALF-FULL
HALF-FULL
VEROPIN
R21
100k
RST BS2
J9
CONN-H2
J8
CONN-H2
U14
BS2
BS2-IC++
V5V
VDD
VSS
TX
RX
ATN
RES
RP1
RP2
J7
CONN-SIL5
E/S