X12 DIS/UMA Single Rank (14" / 15" / 17") Chocolate
Intel Cresent Bay ULT Platform Block Diagram

PCB 6L STACK UP

LAYER 1 : TOP
LAYER 2 : SGND
LAYER 3 : IN1(High)
LAYER 4 : IN2(Low)
LAYER 5 : SVCC
LAYER 6 : GND

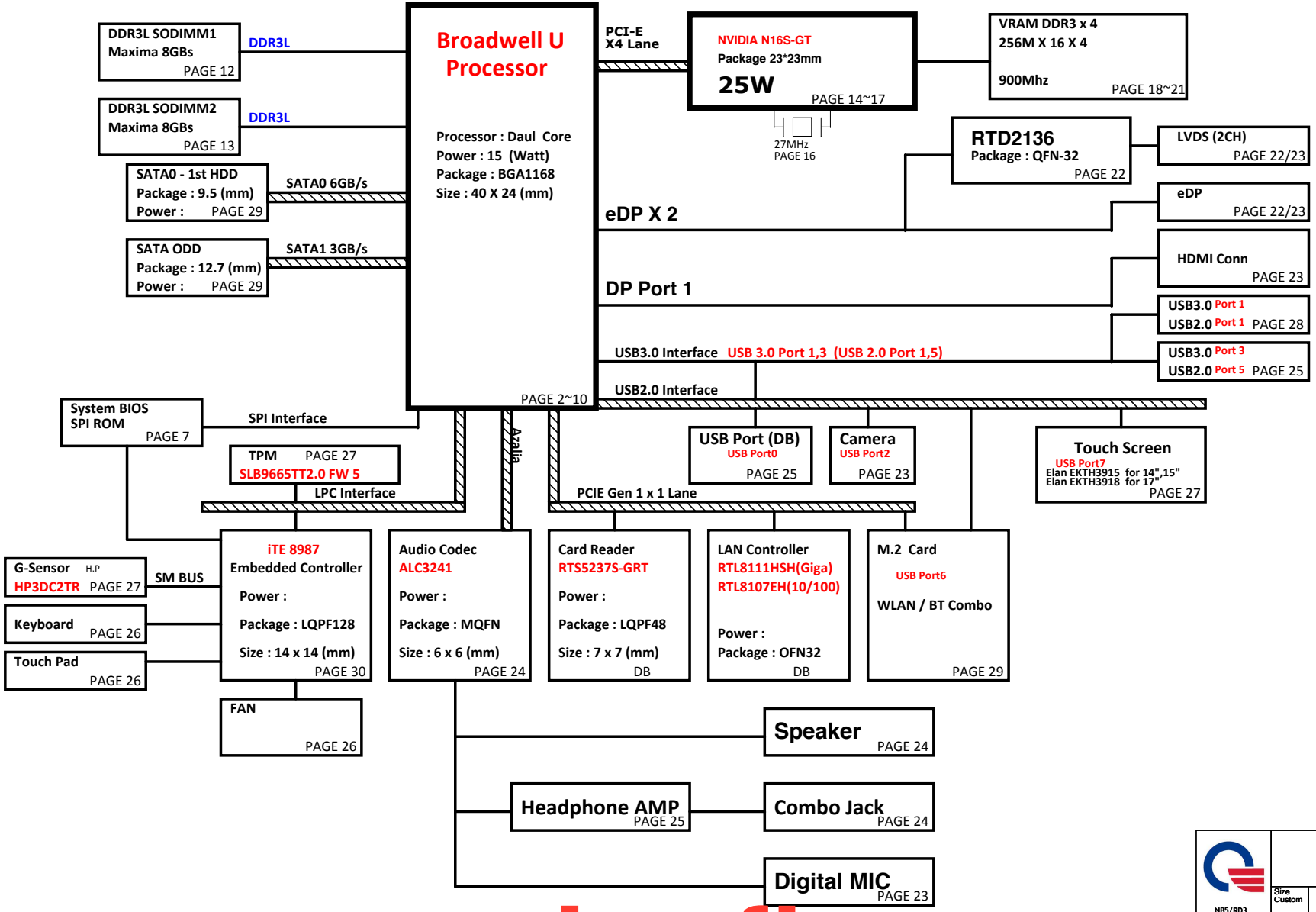

Note
VGA/CPU need check PN

NB5/RD3

PROJECT : X12
Quanta Computer Inc.

Size	Document Number	Rev
Custom	Block Diagram	1A

Date: Wednesday, March 04, 2015 | Sheet 1 of 40

www.vinafix.com

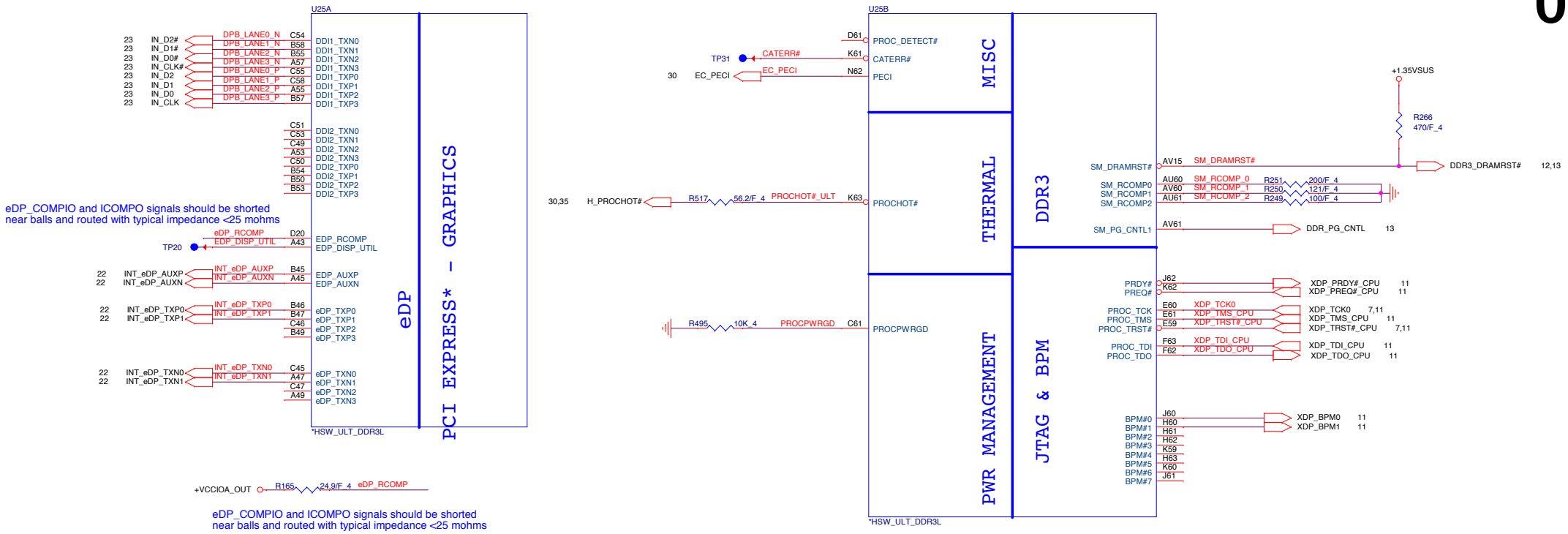

Processor pull-up (CPU)

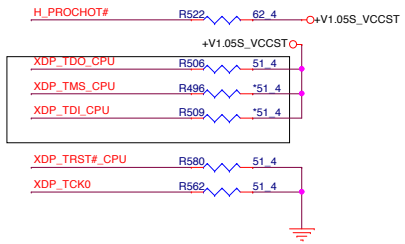

PROJECT : X12
Quanta Computer Inc.

Size	Document Number	Rev
Custom	ULT 1/9(eDP/DDI)	1A

NB5/RD3

Date: Wednesday, March 04, 2015 | Sheet 2 of 40

Haswell ULT Processor (DDR3L)

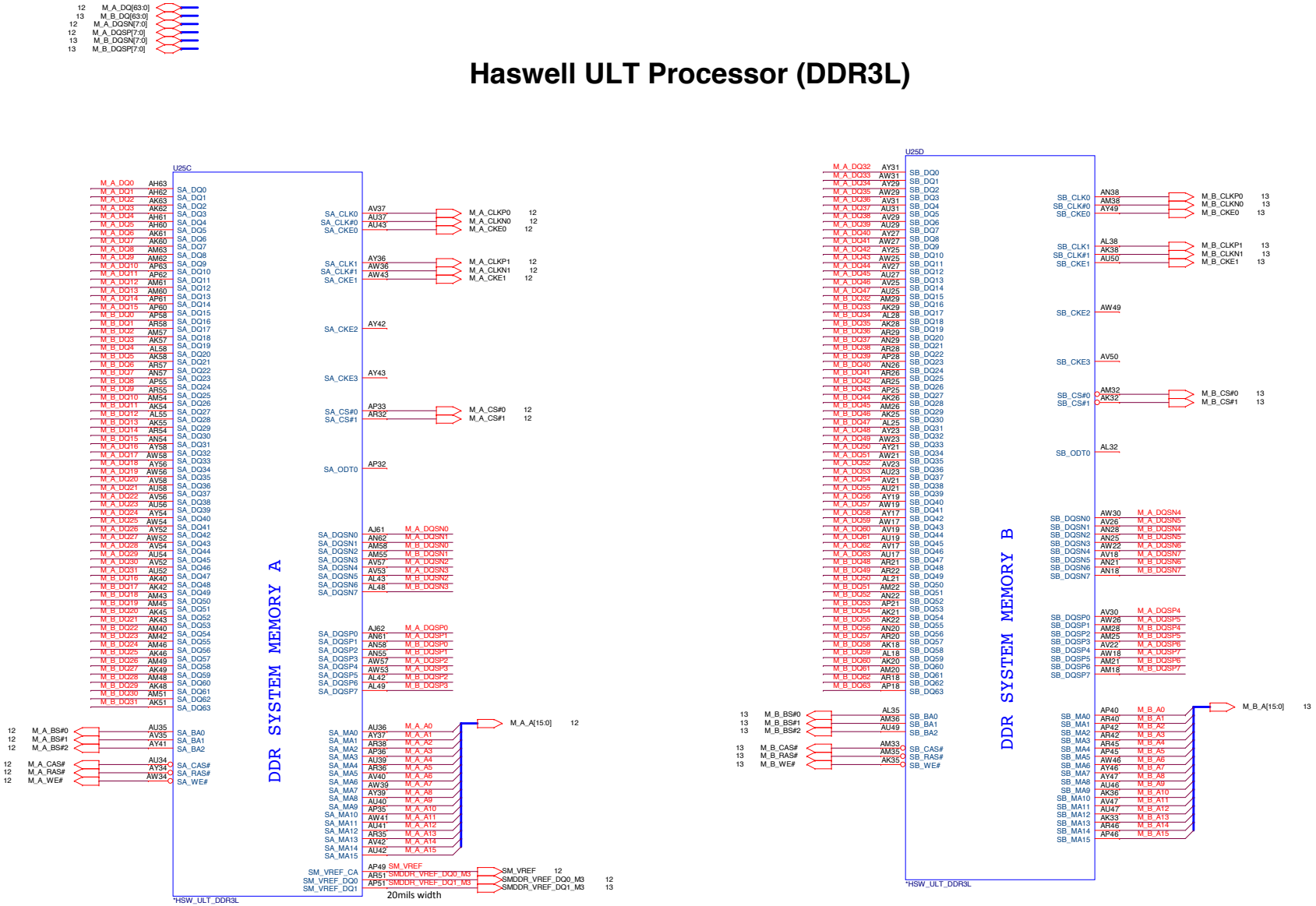

Size	Document Number	Rev
Custom	ULT 2/9 (DDR3 I/F)	1A

PROJECT : X12
Quanta Computer Inc.

N85/RD3

Date: Wednesday, March 04, 2015 | Sheet 3 of 40

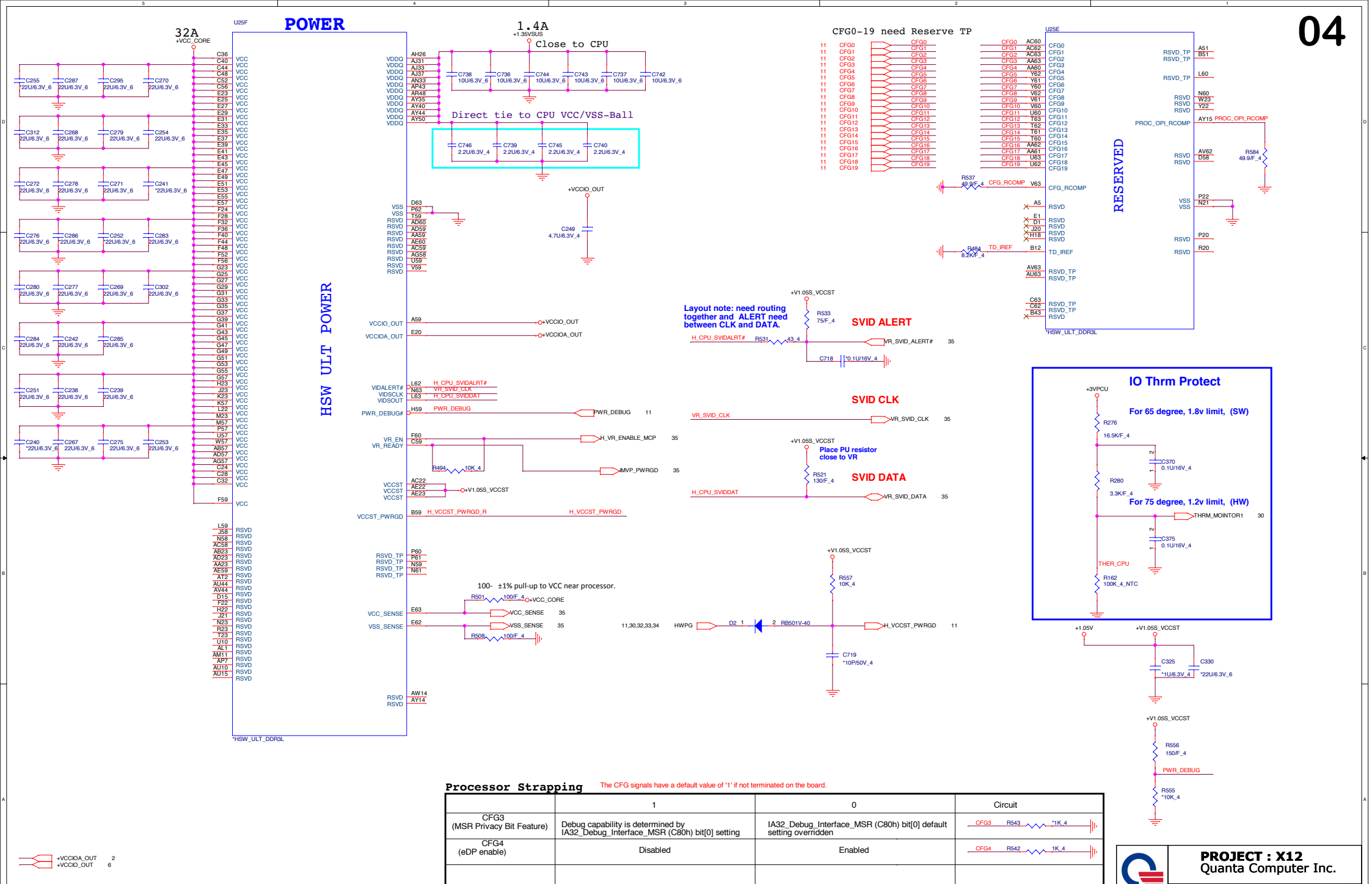

Processor Strapping

The CFG signals have a default value of '1' if not terminated on the board.

	1	0	Circuit
CFG3 (MSR Privacy Bit Feature)	Debug capability is determined by IA32_Debug_Interface_MSR (C80h) bit[0] setting	IA32_Debug_Interface_MSR (C80h) bit[0] default setting overridden	CFG3 R543 *1K_4
CFG4 (eDP enable)	Disabled	Enabled	CFG4 R542 1K_4

NB5/RD3

PROJECT : X12
Quanta Computer Inc.

Size	Document Number	Rev
Custom	04 – ULT 3/9 (POWER-1)	1A

Date: Wednesday, March 04, 2015 | Sheet 4 of 40

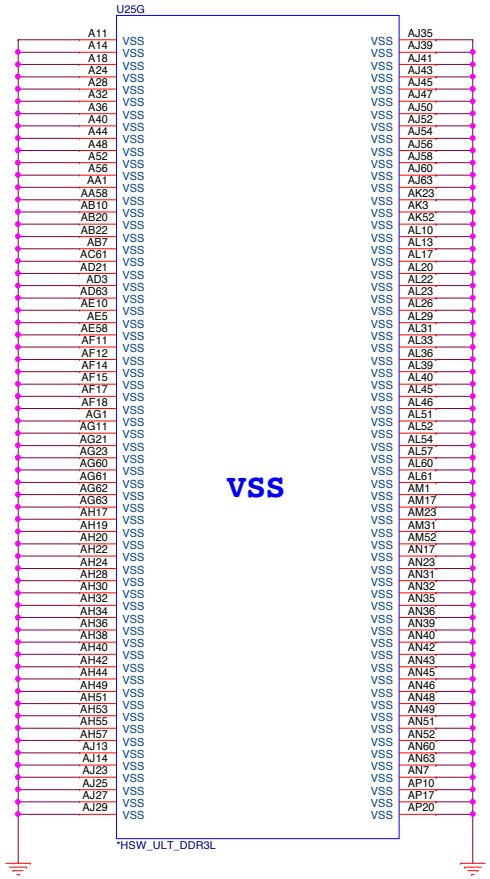

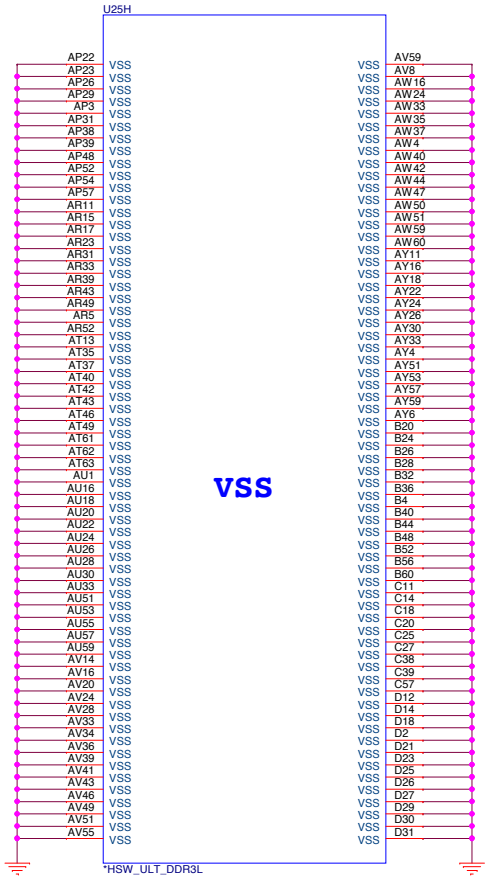

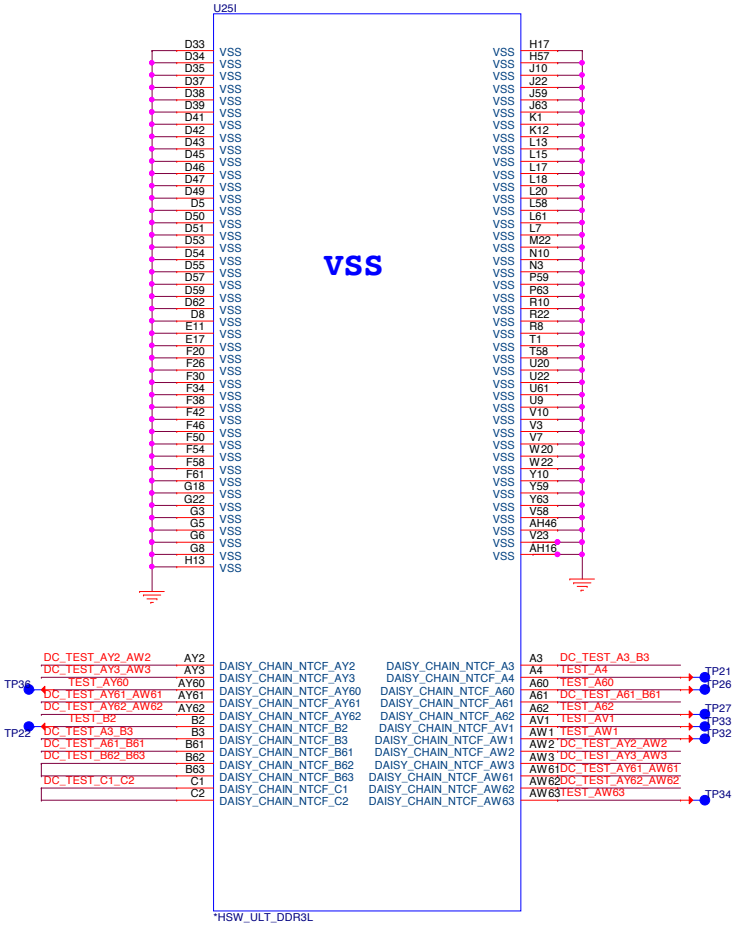

PROJECT : X12
Quanta Computer Inc.

Size	Document Number	Rev
Custom	ULT 4/9 (RSV,GND)	1A

NB5/RD3

Date: Wednesday, March 04, 2015 | Sheet 5 of 40

Lynx Point-LP Platform Controller Hub (LVDS,DDI)

06

PCH Pull-high/low(CLG)

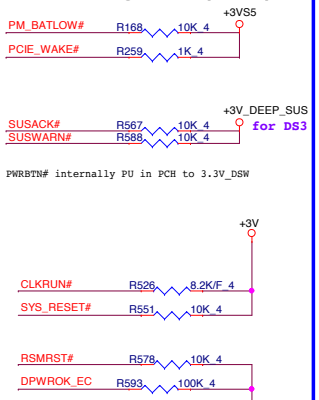

PLTRST#(CLG)

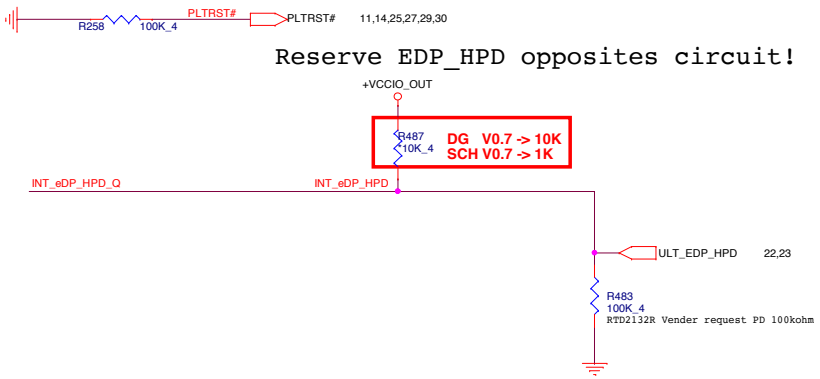

System PWR_OK(CLG)

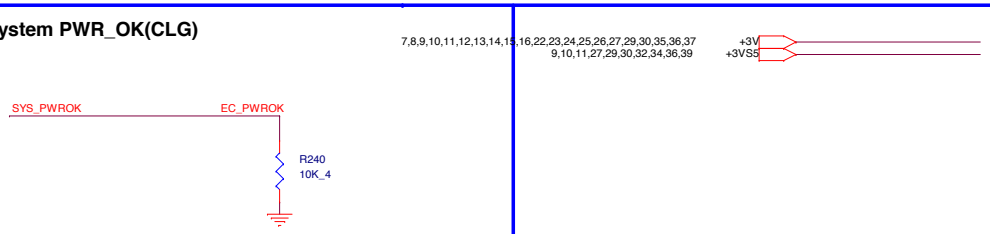

N85/RD3

PROJECT : X12
Quanta Computer Inc.

Size	Document Number	Rev
Custom	ULT 5/9(Power Manger)	1A

Date: Wednesday, March 04, 2015 Sheet 6 of 40

Lynx Point-LP Platform Controller Hub (HDA,JTAG,SATA)

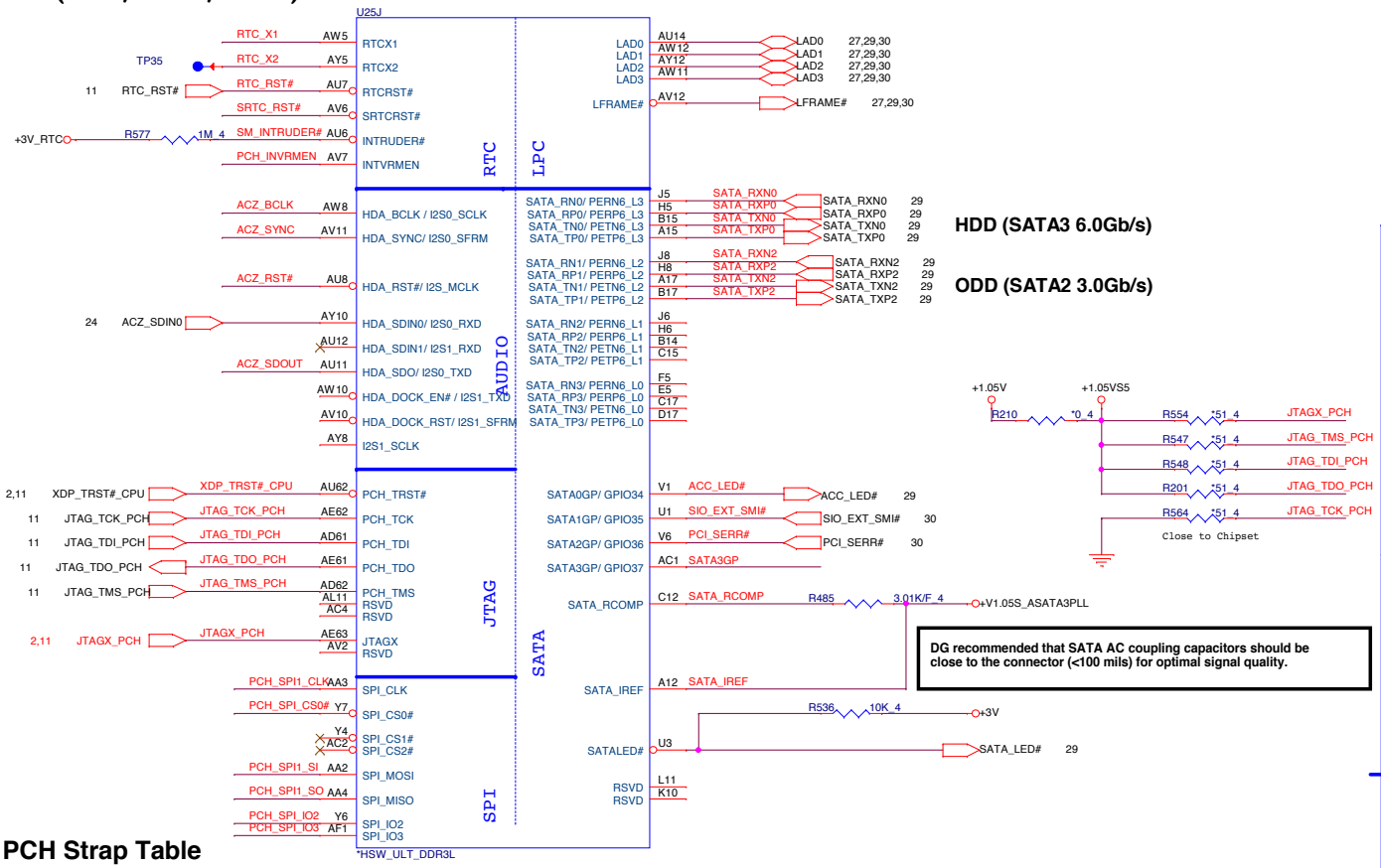

HDD (SATA3 6.0Gb/s)

ODD (SATA2 3.0Gb/s)

DG recommended that SATA AC coupling capacitors should be close to the connector (<100 mils) for optimal signal quality.

PCH Strap Table

Pin Name	Strap description	Sampled	Configuration	Circuit
SPKR	No reboot mode setting	PWROK	0 = Default (weak pull-down 20K) 1 = Setting to No-Reboot mode	
SDIO_D0 /GPIO66	Top-Block Swap	PWROK	0 = "top-block swap" mode 1 = Default (weak pull-up 20K)	
INTVRMEN	Integrated 1.05V VRM enable	ALWAYS	Should be always pull-up	+3V_RTC R575 330K_4 PCH_INVRMEN
HDA_SDO /I2S0_TXD	Flash Descriptor Security Only for Interposer	PWROK	0 = Default (weak pull-down 20K) 1 = Can be Overridden	30 GPIO33_EC R581 1K_4 ACZ_SDOUT
GSPI0_MOSI /GPIO86	Boot BIOS Selection	PWROK	GNT0# 1 = LPC; GNT0# 0 = SPI(Default)	
GPIO15	TLS Confidentiality	PWROK	0 = ME Crypto Transport Layer Security cipher suite with no confidentiality(Default) 1 = Intel ME Crypto TLS cipher suite with confidentiality	
DSWVRMEN	Deep Sx Well On-Die Voltage Regulator Enable	ALWAYS	Should be always pull-up	+3V_RTC R576 330K_4 DSWVRMEN 6
				30 PCH_SPI_CS0#_R 30 PCH_SPI1_CLK_R 30 PCH_SPI1_SI_R 30 PCH_SPI1_SO_R

RTC Clock 32.768KHz

07

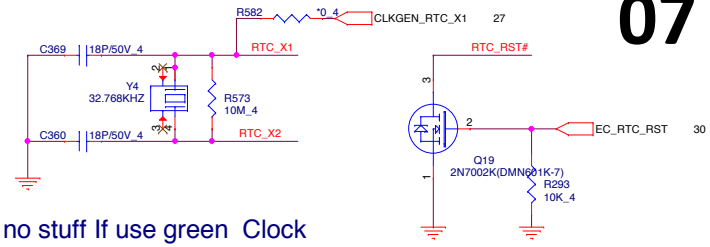

no stuff If use green Clock

RTC Circuitry(RTC)

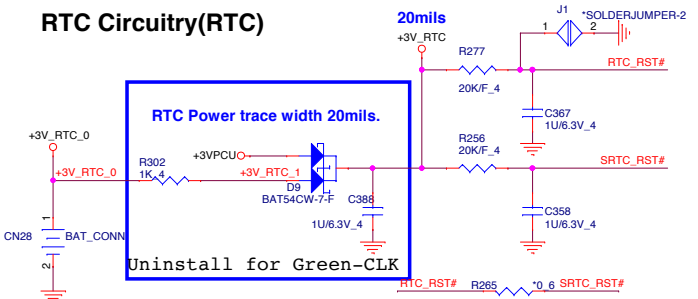

HDA Bus(CLG)

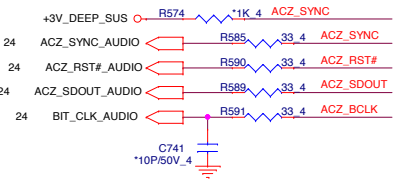

GPIO Pull UP

4M SPI ROM Socket

Vender	Size	P/N
EON	8MB	AKE3EZN0Q01 (EN25QH64-104HIP)
Winbond	8MB	AKE3EFP0N07 (W25Q64FVSSIQ)
GigaDevice	8MB	AKE3EGN0Q01 (GD25B64BSIGR)
Socket		DFHS08FS023

U23&U24 footprint 要重疊

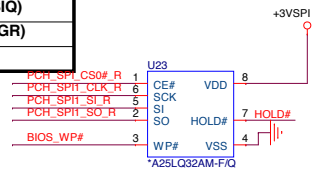

PCH SPI ROM(CLG)

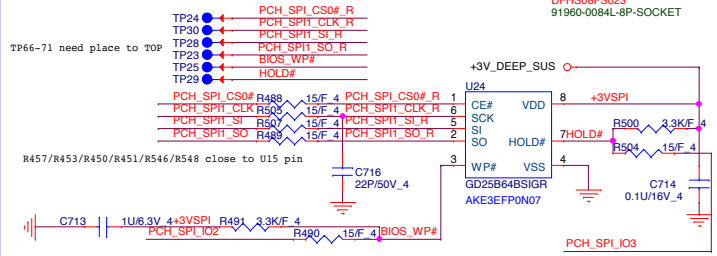

+3V	6,8,9,10,11,12,13,14,15,16,22,23,24,25,26,27,29,30,35,36,37
+5V	23,24,25,26,27,29,36
+1.05V	2,4,9,10,11,27,30,34,35,36,
+3VS5	6,9,10,11,27,29,30,32,34,3
+3VPCU	4,25,26,27,29,30,31,32
+3V_RTC	10,27
+V1.05S_ASATA3PLL	10

N85/RD3

PROJECT : X12
Quanta Computer Inc.

Size	Document Number	Rev
Custom	ULT 6/9(SATA/HDA)	1A

Date: Wednesday, March 04, 2015 Sheet 7 of 40

Lynx Point-LP Platform Controller Hub (HDA,JTAG,SATA)

08

PCI/USBOC# Pull-up(CLG)

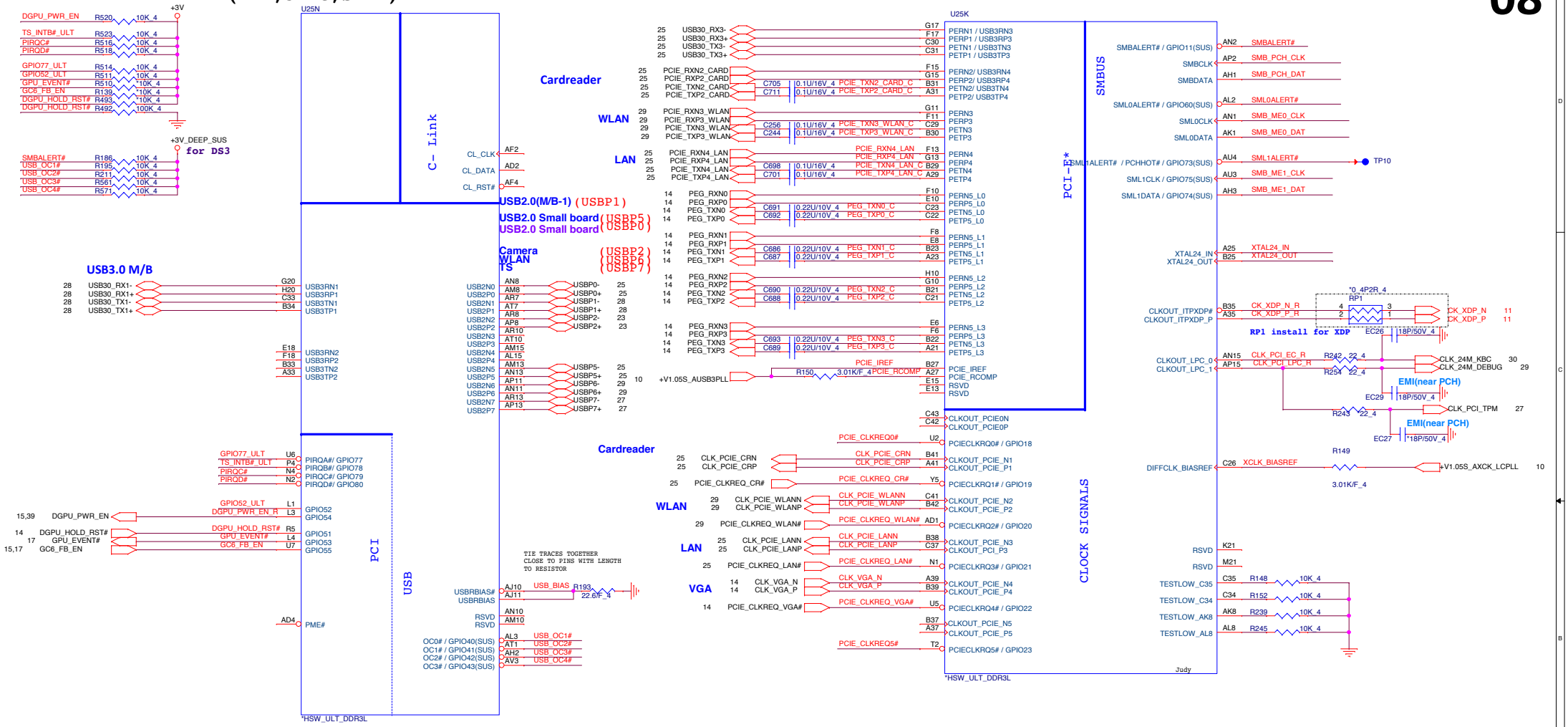

SMBus/Pull-up(CLG)

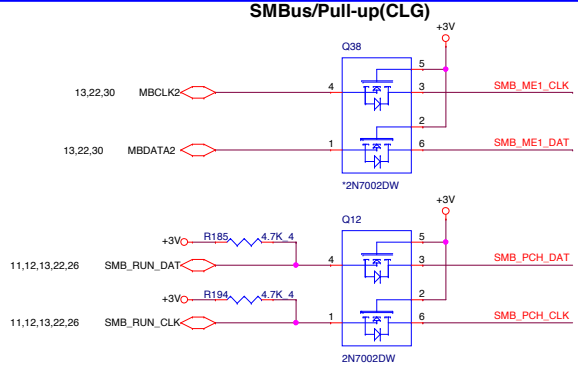

CLK_REQ/Strap Pin(CLG)

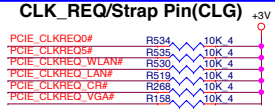

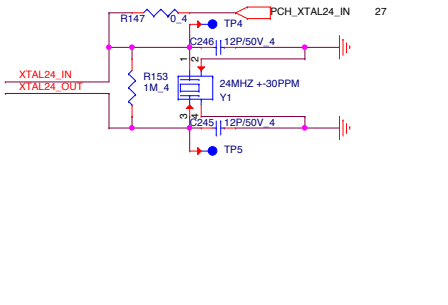

SMBus/Pull-up(CLG)

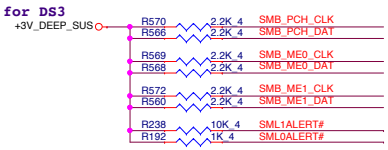

NB5/RD3

PROJECT : X12
Quanta Computer Inc.

Size	Document Number	Rev
Custom	ULT 7/9 (PCIE/USB/CLK)	1A

Date: Wednesday, March 04, 2015 | Sheet 8 of 40

Lynx Point-LP Platform Controller Hub (HDA,JTAG,SATA) Haswell (GPIO)

09

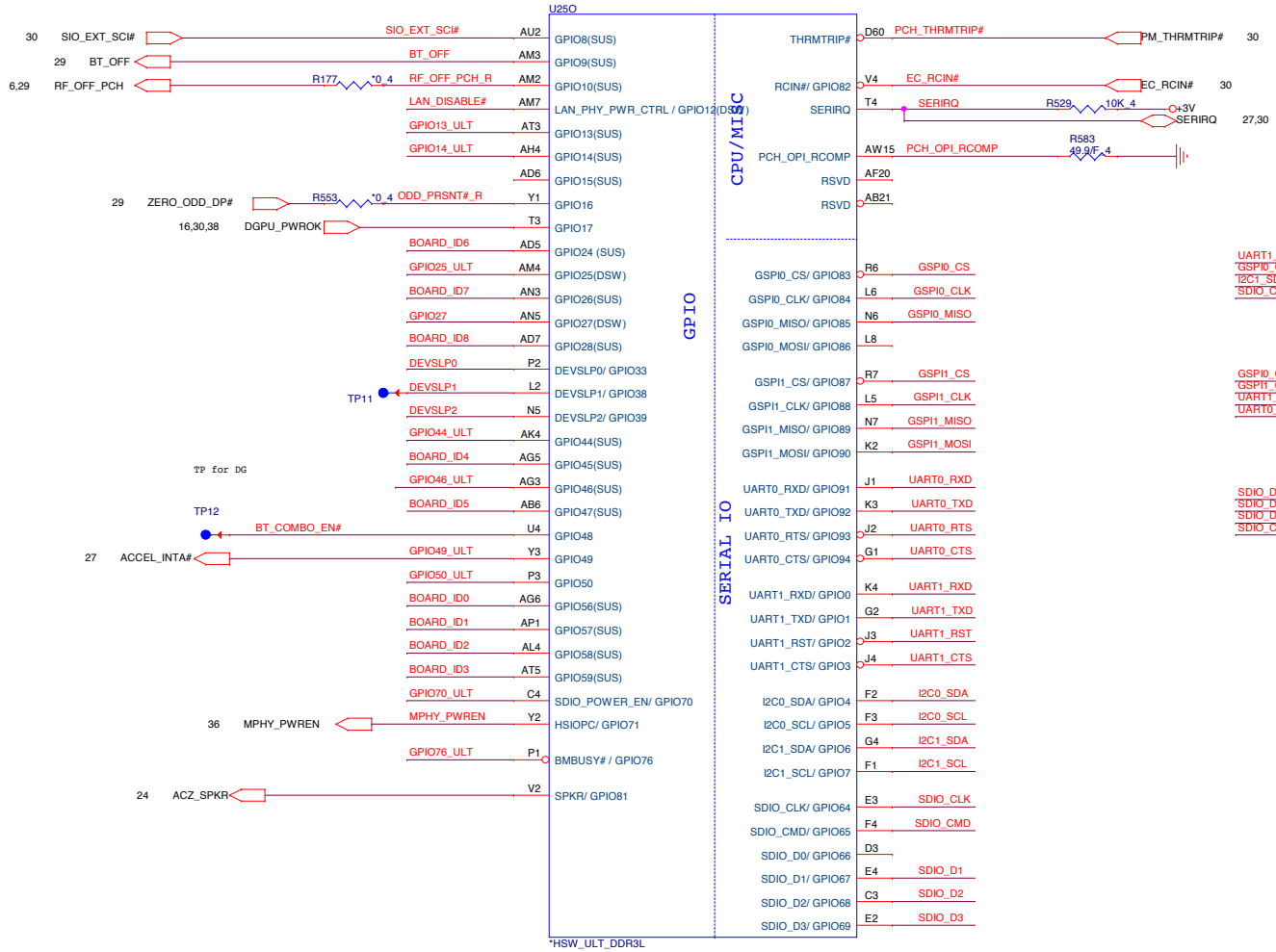

Add C7046 for EMI reserve

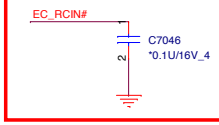

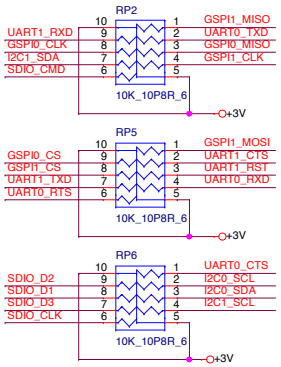

GPIO Pull-up/Pull-down(CLG)

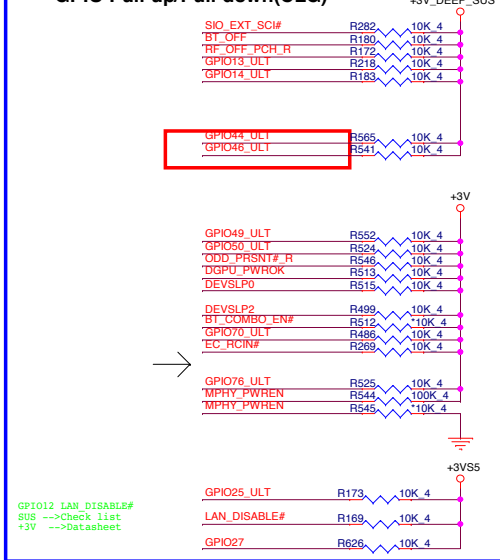

Close to EC

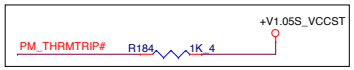

Model	BOARD_ID[8:7]	BOARD_ID[6:5]	Board ID [4:3]	BOARD_ID[2:1]	BOARD_ID0
Definition	Reserve (Default = 00)	Reserve (Default = 00)	00 Single Rank (X12) 01 DUAL Rank (X12) 10 Meso-AMD (X11) 11 Reserve	00 14" 01 15" 10 17"	0 : UMA 1 : DIS

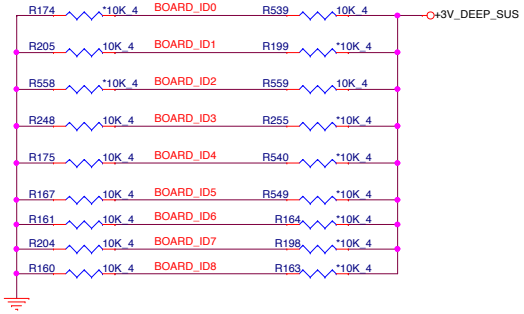

6,7,8,10,11,12,13,14,15,16,22,23,24,25,26,27,29,30,35,36,37 +3V
6,10,11,27,29,30,32,34,36,39 +3VS5

N85/RD3

PROJECT : X12
Quanta Computer Inc.

Size	Document Number	Rev
Custom	ULT 8/9 (GPIO/MISC)	1A

Date: Wednesday, March 04, 2015 Sheet 9 of 40

Lynx Point-LP Platform Controller Hub (HDA,JTAG,SATA)(POWER)

10

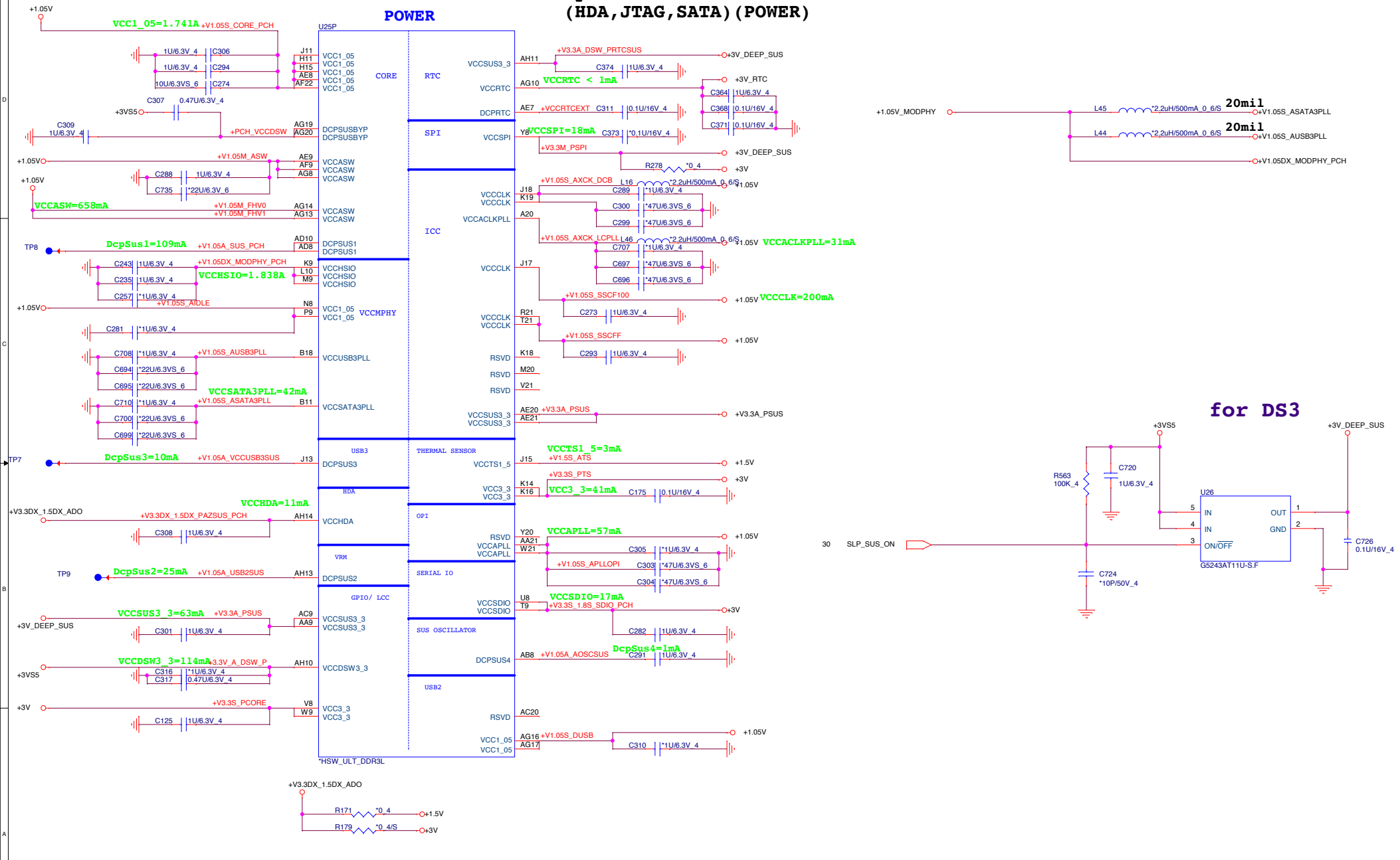

PROJECT : X12
Quanta Computer Inc.

Size	Document Number	Rev
Custom	ULT 9/9(POWER-2)	1A

Date: Wednesday, March 04, 2015 | Sheet 10 of 40

N85/RD3

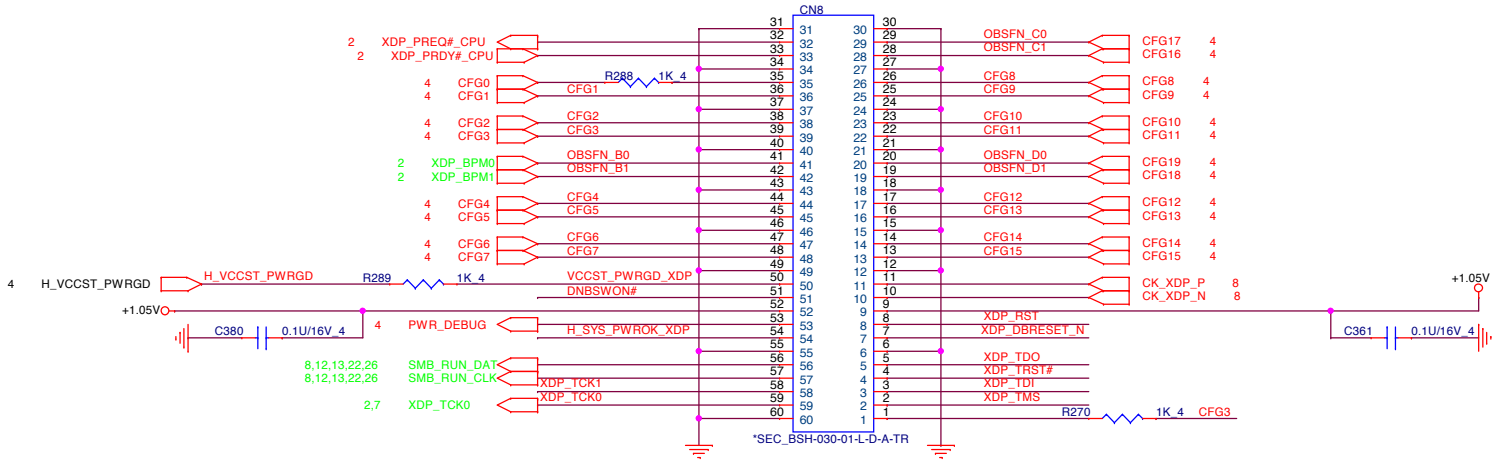

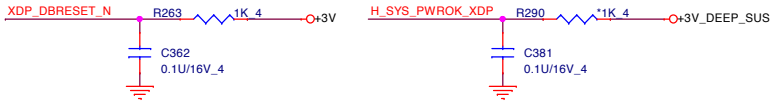

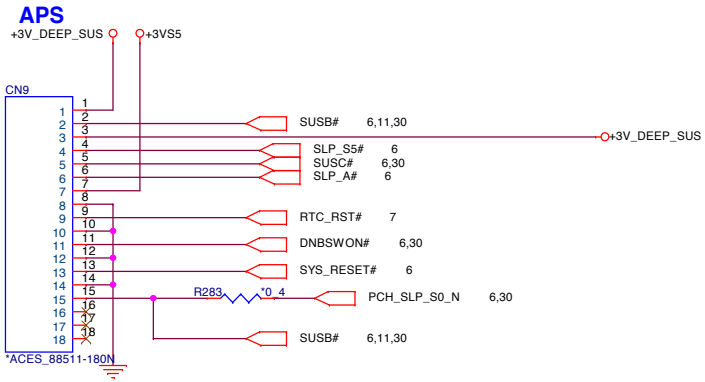

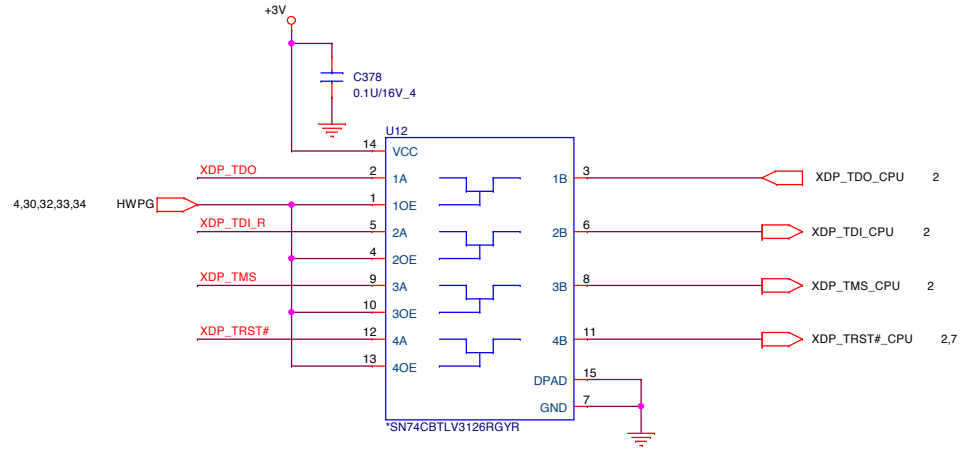

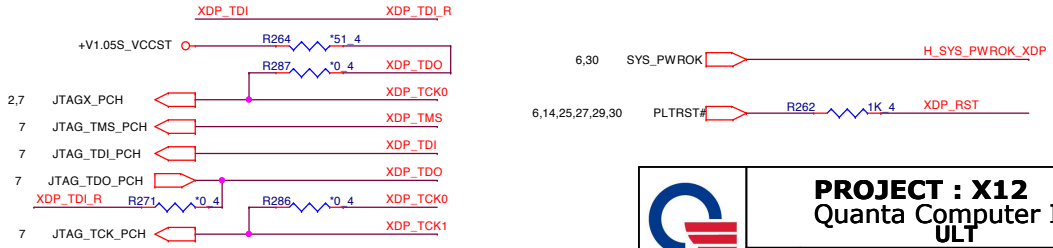

PROJECT : X12
Quanta Computer Inc.
ULT

Size	Document Number	Rev
	HSW XDP & APS	1A

Date: Wednesday, March 04, 2015 | Sheet 11 of 40

NB5/RD3

DIMM & Footprint 同Joshua提供

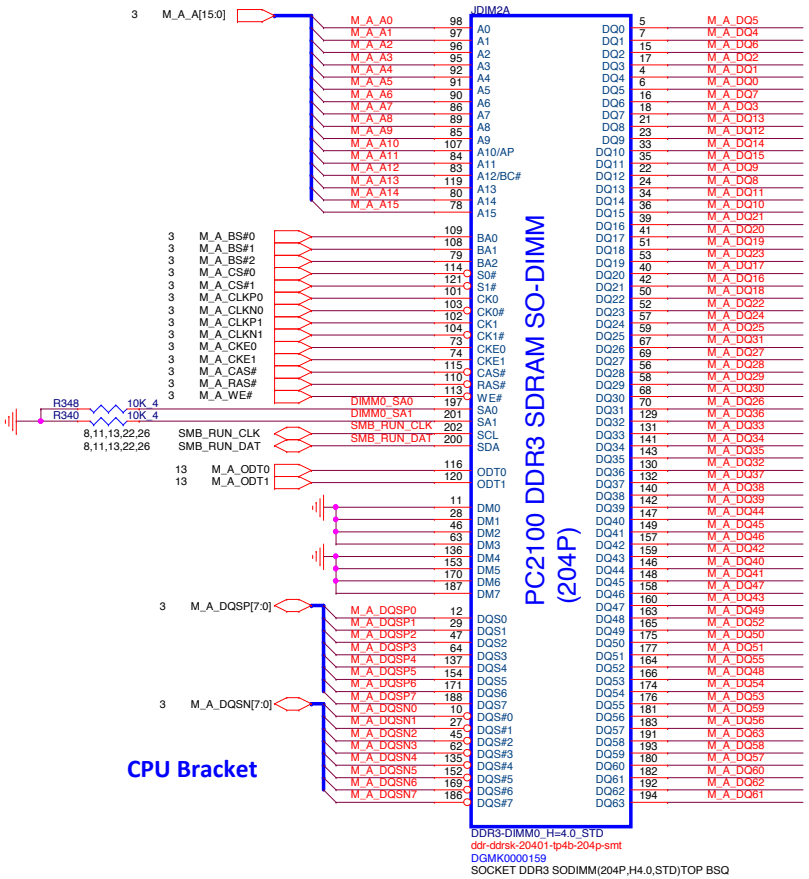

CPU Bracket

2.48A

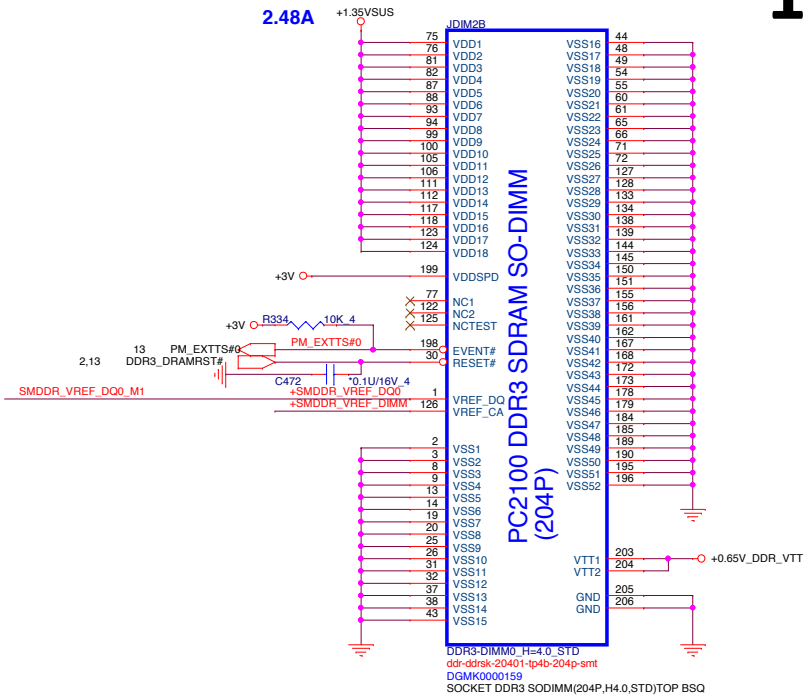

For EMI RESERVE

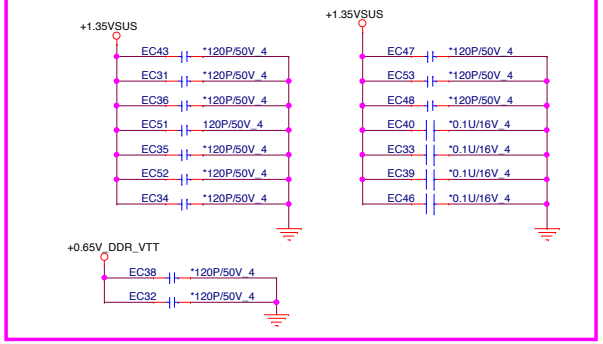

Place these Caps near So-Dimm0.

1uF/10uF 4pcs on each side of connector

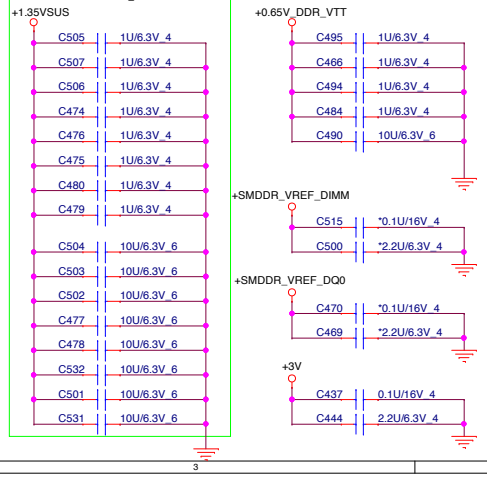

VREF DQ0 M1 Solution

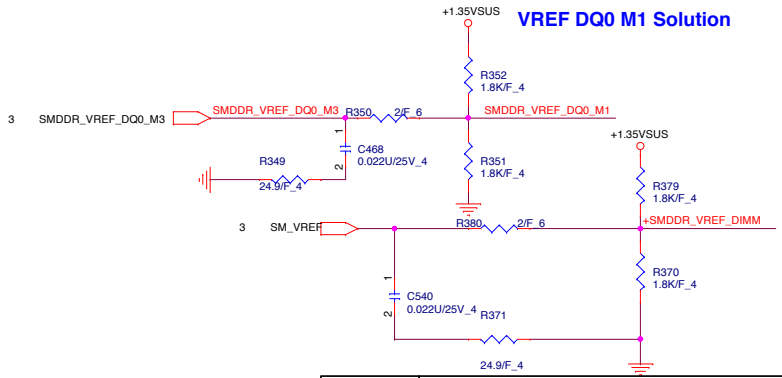

N85/RD3	**PROJECT : X12** Quanta Computer Inc.	
Size Custom	Document Number **DDR3 DIMM0-STD(4.0H)**	Rev 1A
Date: Wednesday, March 04, 2015	Sheet 12of 40	

DIMM & Footprint 同Joshua提供

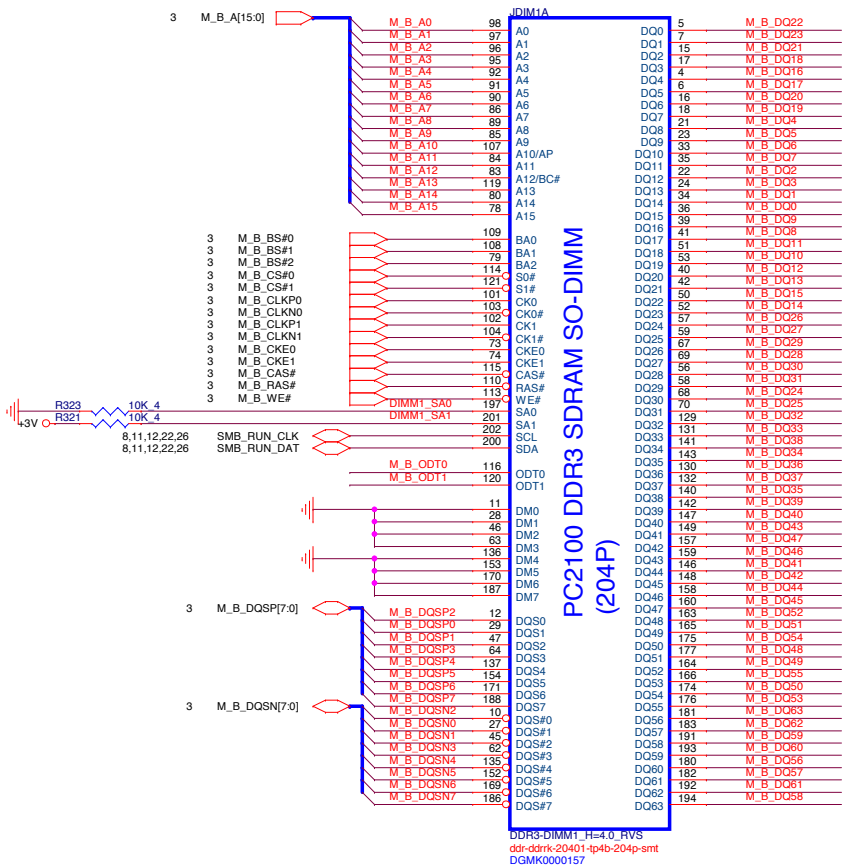

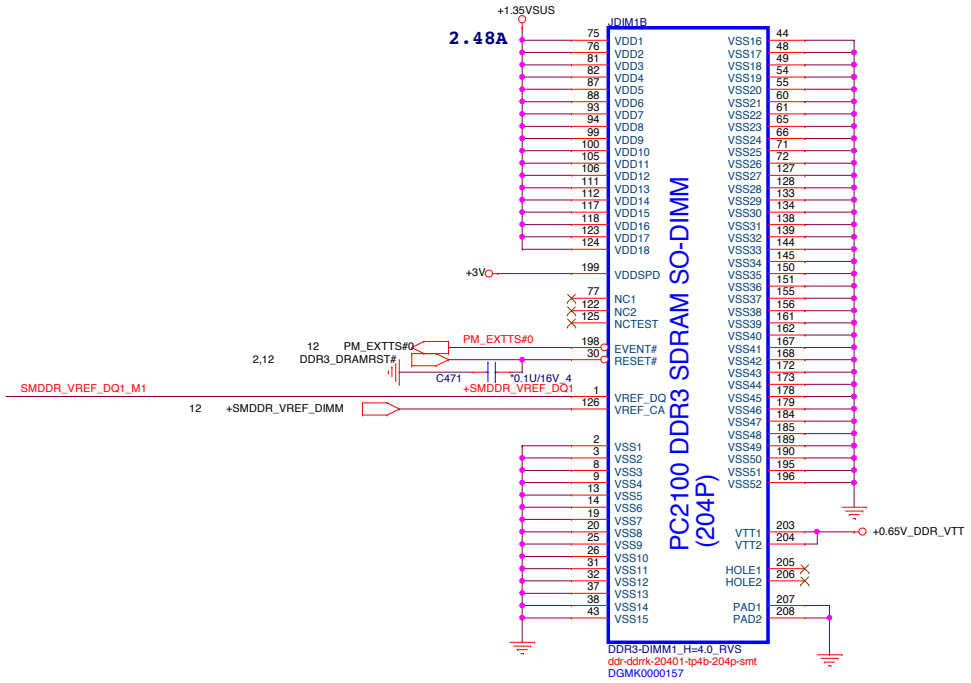

Local Thermal Sensor

MV可移除

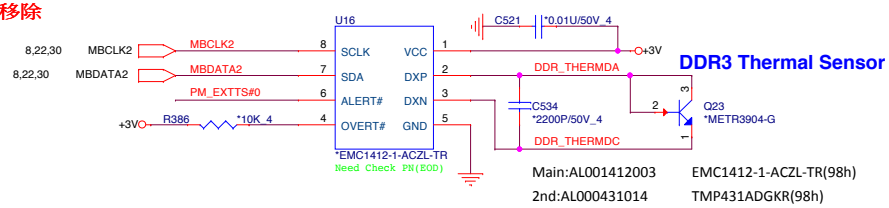

Main:AL001412003 EMC1412-1-ACZL-TR(98h)

2nd:AL000431014 TMP431ADGKR(98h)

DDR3L SODIMM ODT GENERATION

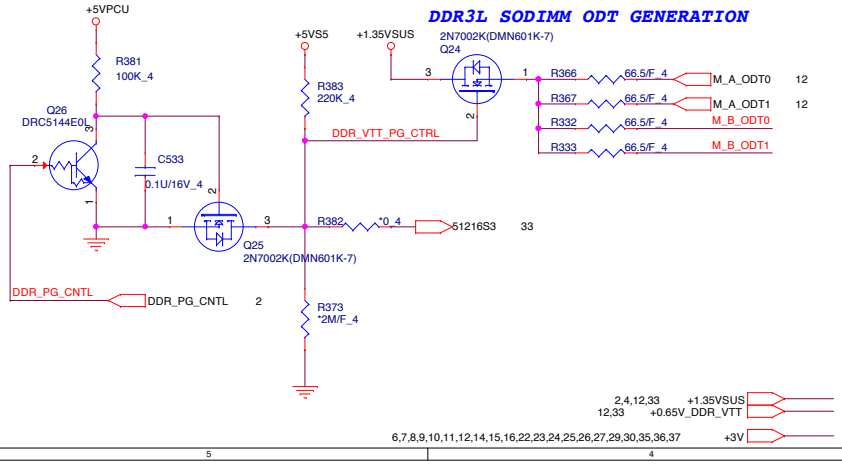

Place these Caps near So-Dimm1.

1uF/10uF 4pcs on each side of connector

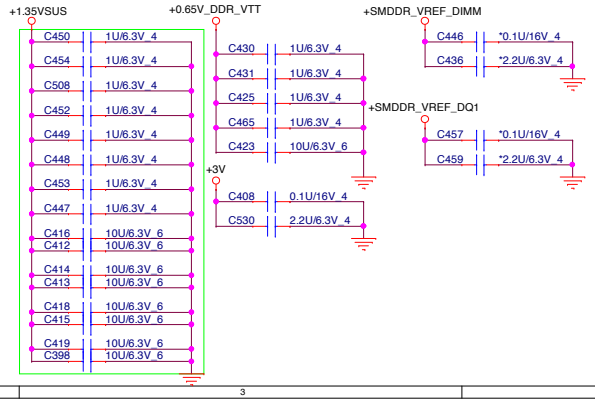

VREF DQ1 M1 Solution

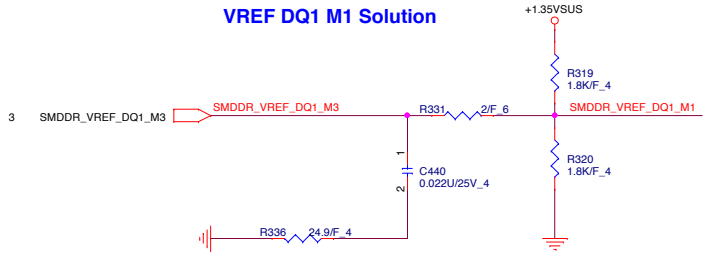

PROJECT : X12

Quanta Computer Inc.

Size	Document Number	Rev
Custom	DDR3 DIMM1-RVS(4.0H)	1A

Date: Wednesday, March 04, 2015 Sheet 13of 40

N85/RD3

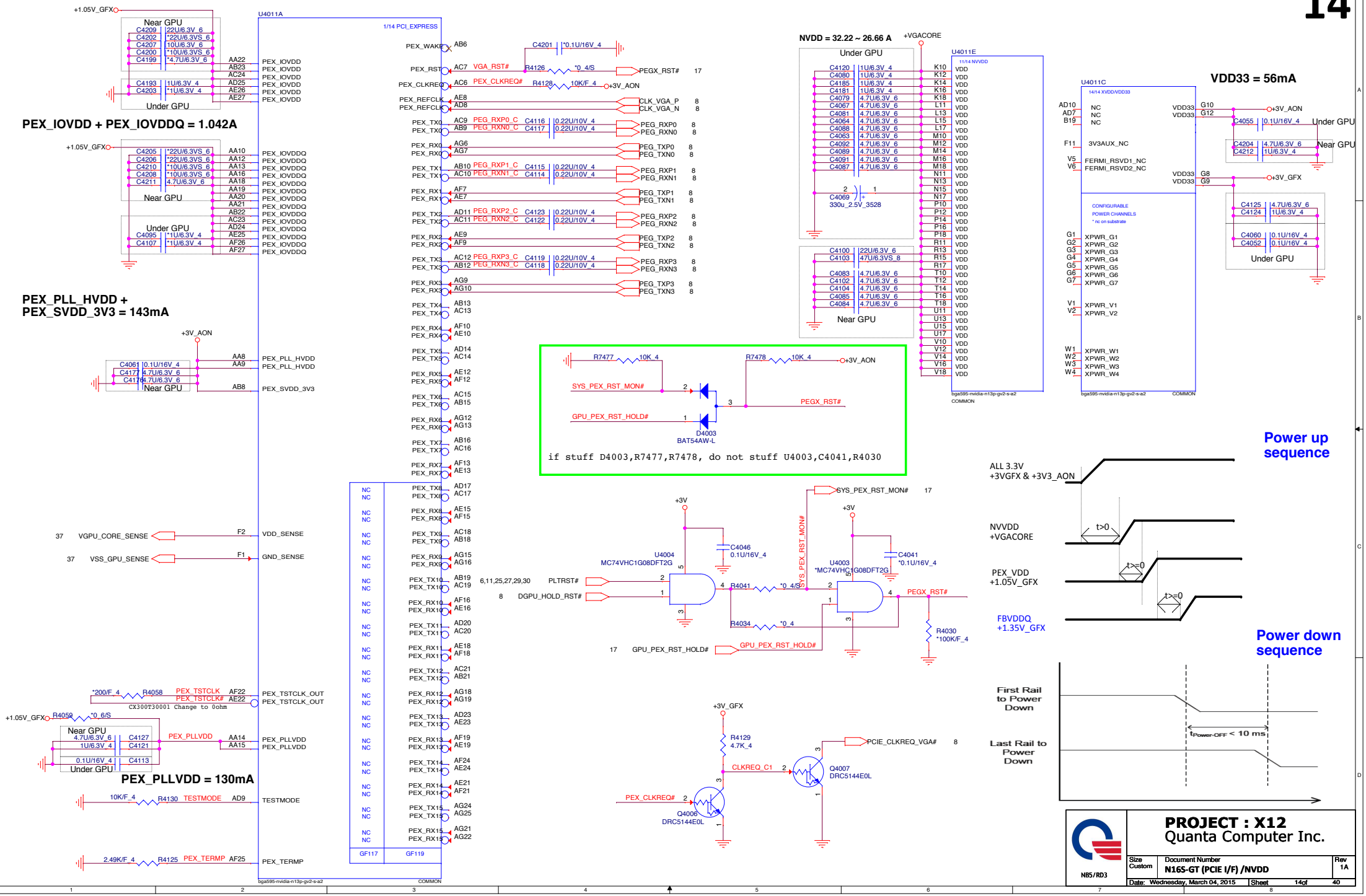
PEX_IOVDD + PEX_IOVDDQ = 1.042A
PEX_PLL_HVDD + PEX_SVDD_3V3 = 143mA
PEX_PLLVDD = 130mA
NVDD = 32.22 ~ 26.66 A
VDD33 = 56mA
U4011A
1/14 PCI_EXPRESS
U4011E
11/14 NVVDD
U4011C
14/14 XVDD/VDD33
Near GPU
Under GPU
+1.05V_GFX
+3V_AON
+VGACORE
+3V_GFX
+3V
VGPU_CORE_SENSE
VSS_GPU_SENSE
VDD_SENSE
GND_SENSE
PEX_TSTCLK_OUT
PEX_PLLVDD
TESTMODE
PEX_TERMP
PEX_WAKE
PEX_RST
PEX_CLKREQ
PEX_REFCLK
CLK_VGA_P
CLK_VGA_N
PEGX_RST#
SYS_PEX_RST_MON#
GPU_PEX_RST_HOLD#
PLTRST#
DGPU_HOLD_RST#
PCIE_CLKREQ_VGA#
CLKREQ_C1
R7477 10K_4
R7478 10K_4
D4003
BAT54AW-L
if stuff D4003,R7477,R7478, do not stuff U4003,C4041,R4030
U4004
MC74VHC1G08DFT2G
U4003
*MC74VHC1G08DFT2G
R4041 *0_4/S
R4034 *0_4
R4030 *100K/F_4
C4046 0.1U/16V_4
C4041 *0.1U/16_4
R4129 4.7K_4
Q4007
DRC5144E0L
Q4006
DRC5144E0L
Power up sequence
ALL 3.3V
+3VGFX & +3V3_AON
NVVDD
+VGACORE
t>0
PEX_VDD
+1.05V_GFX
t>=0
FBVDDQ
+1.35V_GFX
t>=0
Power down sequence
First Rail to Power Down
Last Rail to Power Down
tPower-OFF < 10 ms
PROJECT : X12
Quanta Computer Inc.
N85/RD3
Size Custom
Document Number
N16S-GT (PCIE I/F) /NVDD
Rev 1A
Date: Wednesday, March 04, 2015
Sheet 14of 40

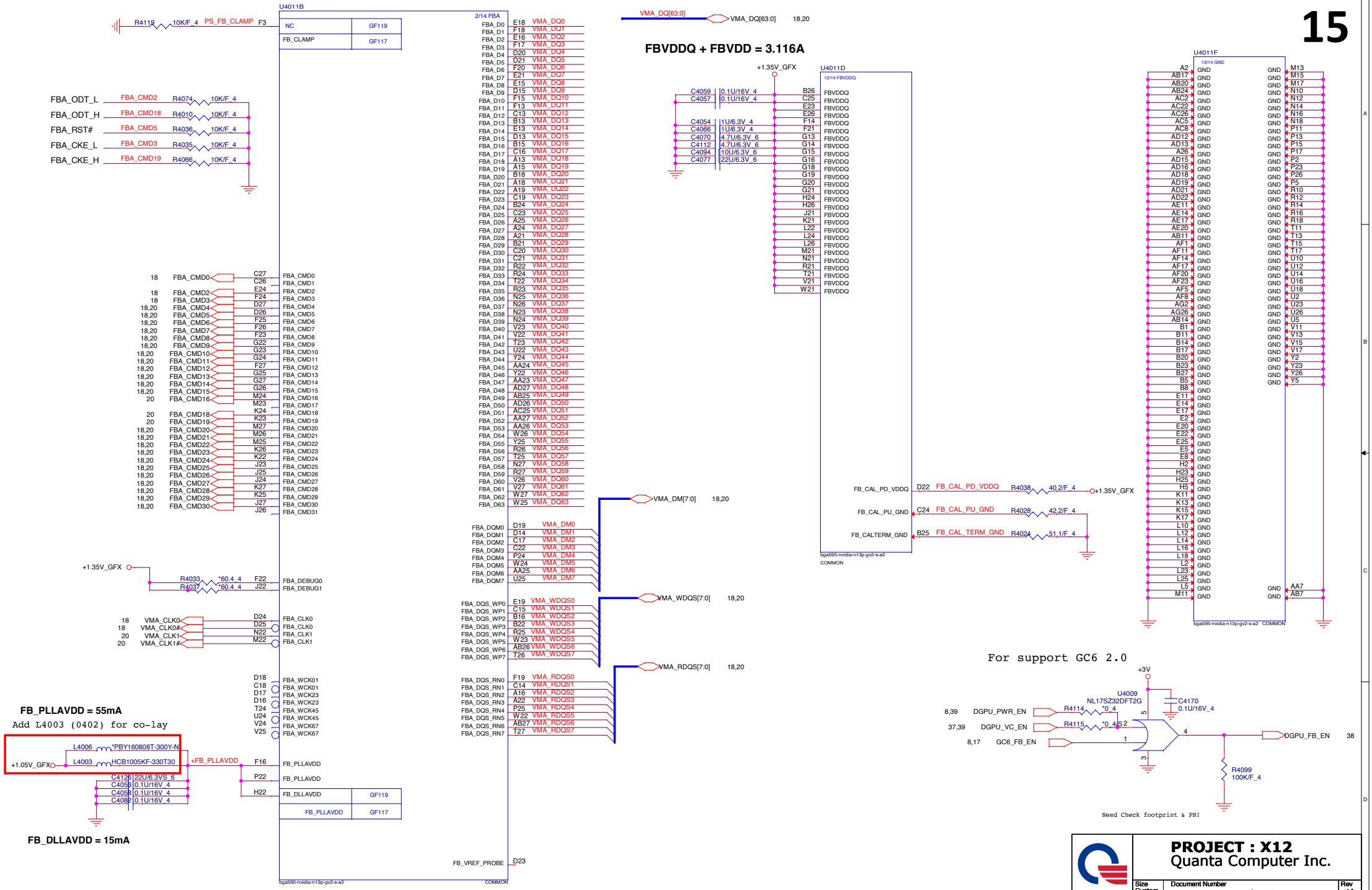

PROJECT : X12
Quanta Computer Inc.

Size	Document Number	Rev
Custom	N16S-GT (MEMORY/GND)	1A

Date: Wednesday, March 04, 2015 | Sheet 15 of 40

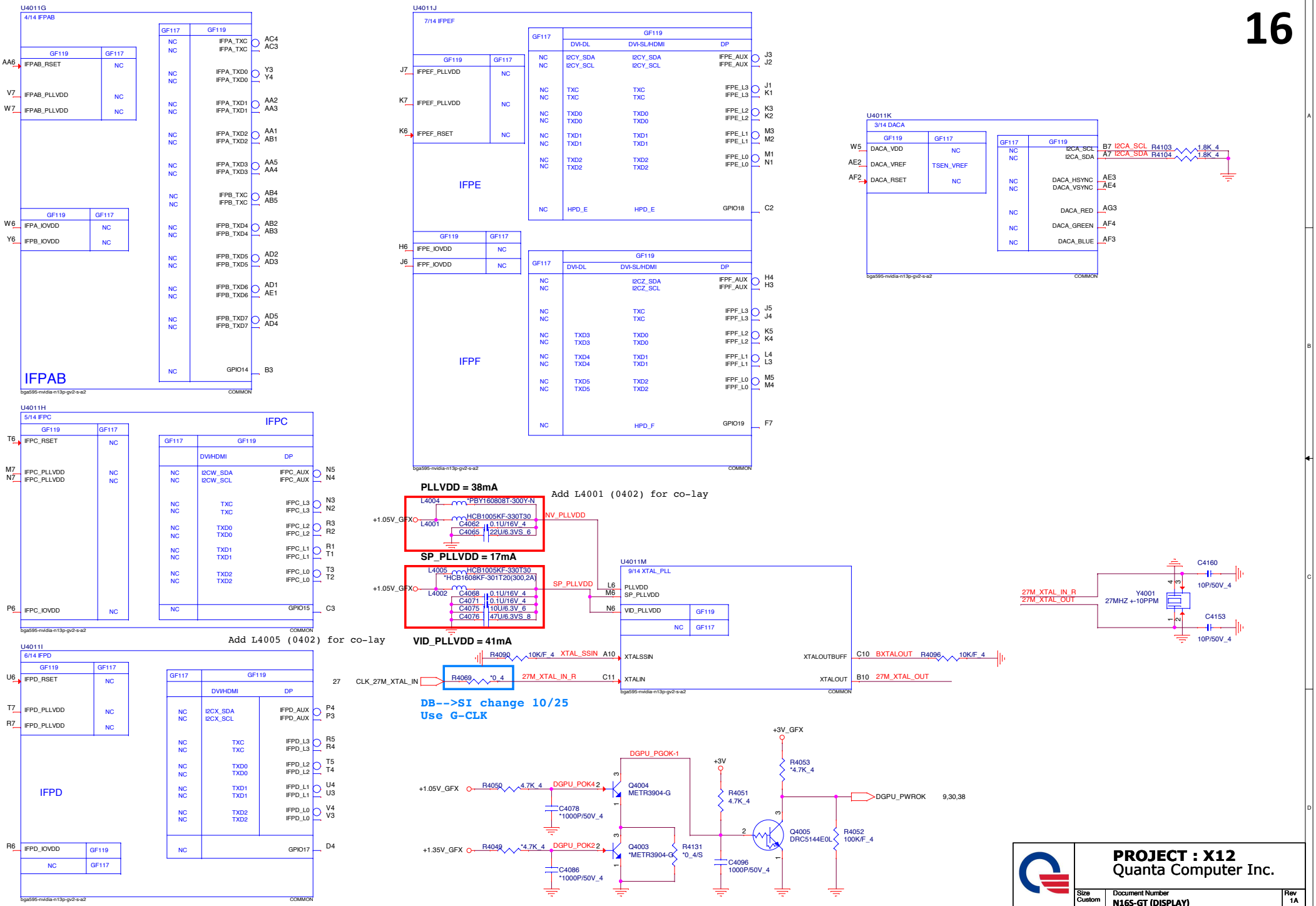
U4011G
4/14 IFPAB
IFPAB
U4011J
7/14 IFPEF
IFPE
IFPF
U4011K
3/14 DACA
U4011H
5/14 IFPC
IFPC
U4011I
6/14 IFPD
IFPD
PLLVDD = 38mA
Add L4001 (0402) for co-lay
SP_PLLVDD = 17mA
VID_PLLVDD = 41mA
Add L4005 (0402) for co-lay
U4011M
9/14 XTAL_PLL
DB-->SI change 10/25
Use G-CLK
DGPU_PGOK-1
DGPU_PWROK
PROJECT : X12
Quanta Computer Inc.
N85/RD3
Size Custom
Document Number
N16S-GT (DISPLAY)
Rev 1A
Date: Wednesday, March 04, 2015
Sheet 16 of 40

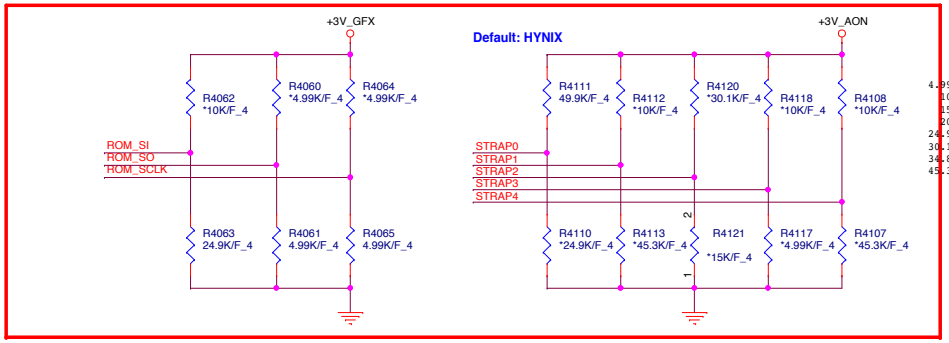

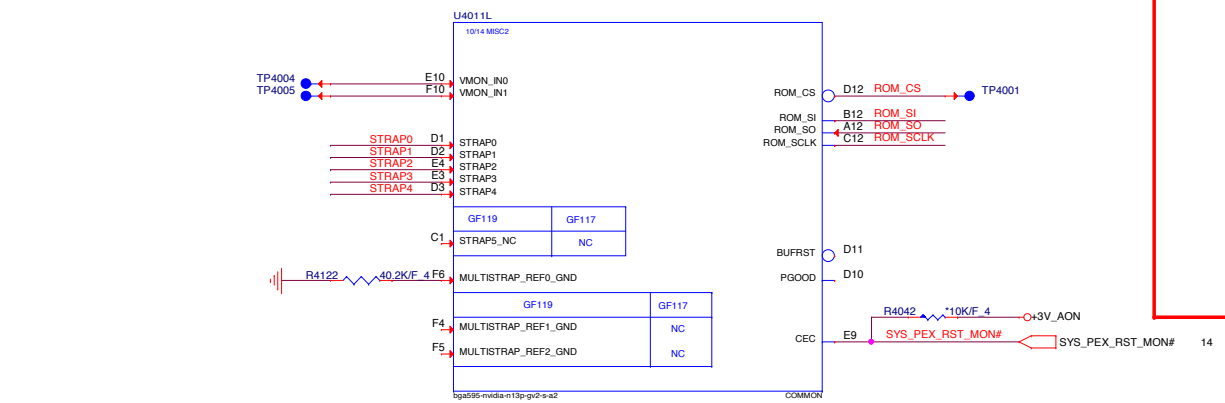

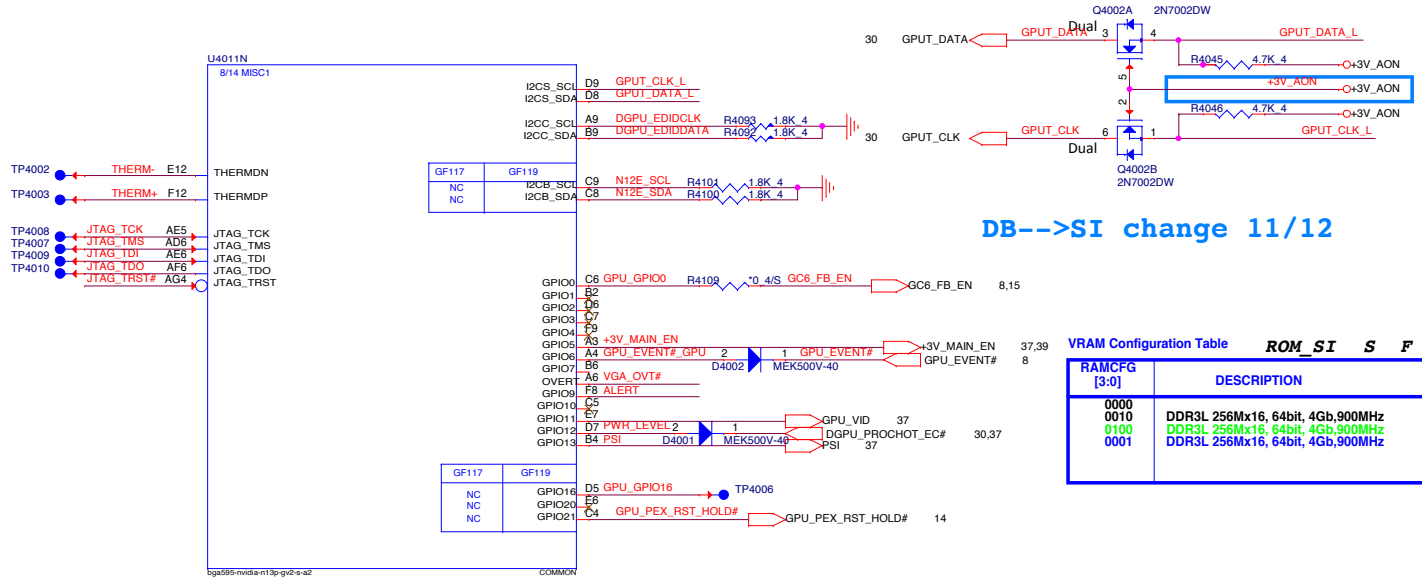

DB-->SI change 11/12

Table 15-2. Resistance Mapping to Hex Values

Resistor Values	Pull-Up to 3V3_MAIN	Pull-Down to GND
4.99 kΩ	1000	0000
10.0 kΩ	1001	0001
15.0 kΩ	1010	0010
20.0 kΩ	1011	0011
24.9 kΩ	1100	0100
30.1 kΩ	1101	0101
34.8 kΩ	1110	0110
45.3 kΩ	1111	0111

VRAM Configuration Table

ROM_SI S F

RAMCFG [3:0]	DESCRIPTION	Vendor	Vendor P/N	Straping	TOP B/S	QBC
0000						
0010	DDR3L 256Mx16, 64bit, 4Gb,900MHz	HYNIX	H5TC4G63CFR-NOC	0x2	AKD5PZDTW01	AKD5PZDTW02
0100	DDR3L 256Mx16, 64bit, 4Gb,900MHz	Micron	MT41J256M16HA-093G:E	0x4	AKD5PZSTL00	AKD5PZSTL01
0001	DDR3L 256Mx16, 64bit, 4Gb,900MHz	SAMSUNG	K4W4G1646E-BC1A	0x1	AKD5PGDT500	AKD5PGDT501

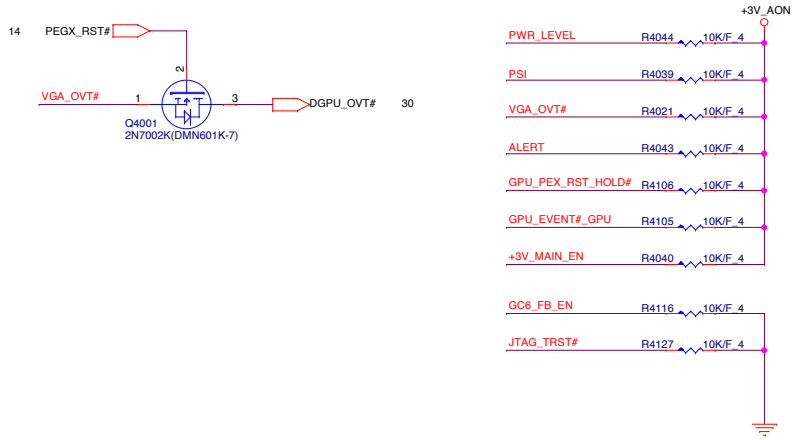

GPIO ASSIGNMENTS

GPIO	I/O	PIN	USAGE
0	IN	FB_CLAMP_MON	FB Clamp monitor
1	OUT	MEM_VDD_CTL	Memory VDD VID
2	OUT	LCD_BL_PWM	Panel Backlight PWM
3	OUT	LCD_VCC	PANEL POWER ENABLE
4	OUT	LCD_BLEN	PANEL BACKLIGHT ENABLE
5	OUT	Reserved	--
6	OUT	FB_CLAMP_TGL_REQ	Active low FB Clamp toggle request
7	OUT	3D VISION	3D VISION LEFT/RIGHT signal
8	I/O	OVERT	ACTIVE LOW THERMAL OVER TEMP
9	I/O	ALERT	ACTIVE LOW THERMAL ALERT
10	OUT	MEM VREF_CTL	MEMMORY VREF CONTROL
11	OUT	PWR_VID	GPU CORE_VDD PWM Control signal
12	IN	PWR_LEVEL	AC Power detect or power supply overdraw input
13	OUT	PSI	Phase Shedding

Rank0

HYU 256Mx16, H5TC4G63AFR-11C QBC PN : AKD5PGWTW08---TOP B/S PN : AKD5PGWTW07
MIC 256Mx16, MT41J256M16HA-093G:E QBC PN : AKD5PZSTL01---TOP B/S PN : AKD5PZSTL00
SAM 256Mx16, K4W4G1646D-BC1A QBC PN : AKD5PGWT501---TOP B/S PN : AKD5PGWT502

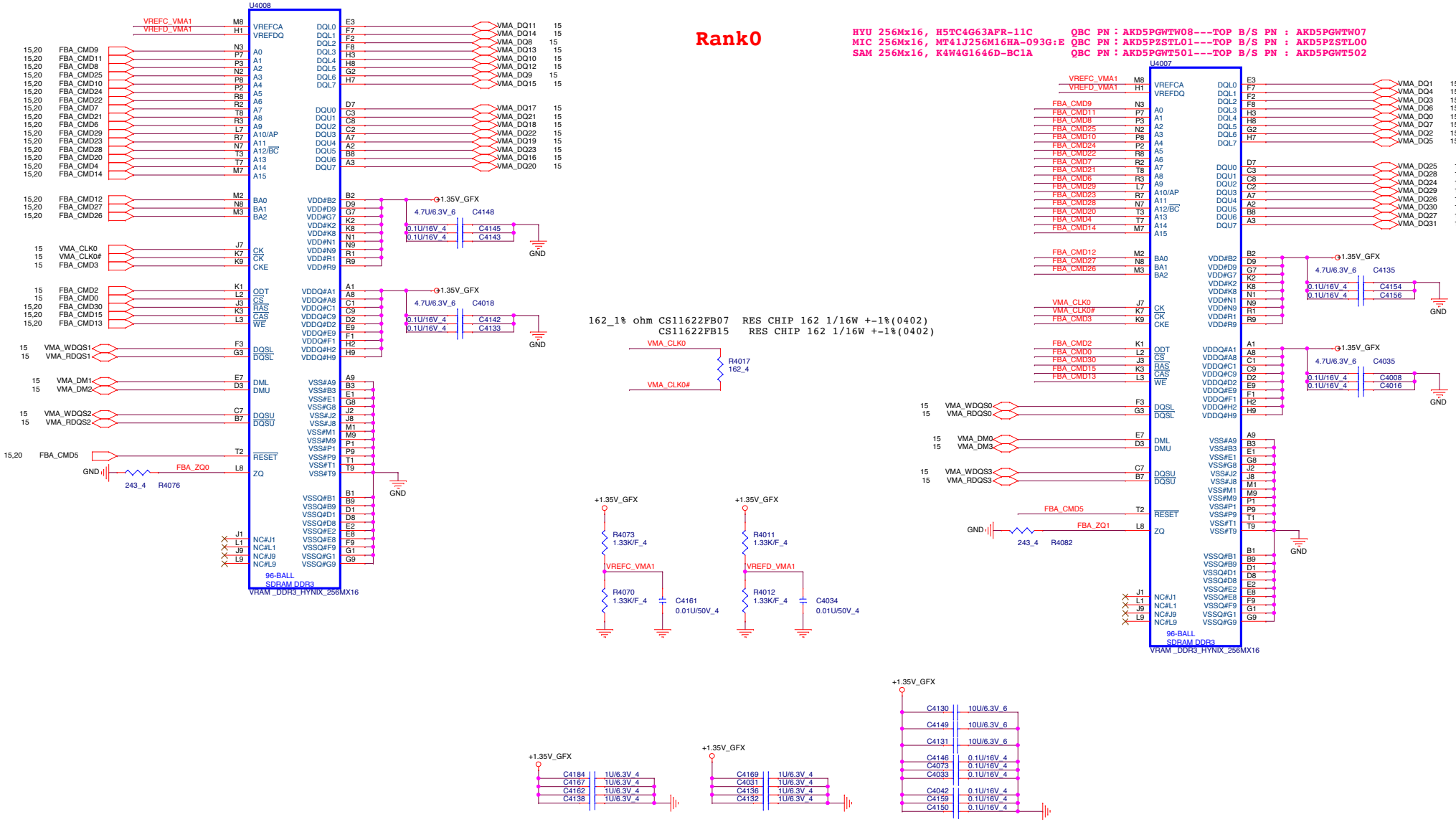

NB5/RD3	**PROJECT : X12** Quanta Computer Inc.
Size Custom	Document Number **DDR3L - RANK0** Rev 1A
Date: Wednesday, March 04, 2015	Sheet 18of 40

NB5

PROJECT :Y05
Quanta Computer Inc.

Size	Document Number	Rev
Custom	DDR3L - RANK1	1A

Date: Wednesday, March 04, 2015 | Sheet 19 of 40

Rank0

HYU 256Mx16, H5TC4G63AFR-11C QBC PN : AKD5PGWTW08---TOP B/S PN : AKD5PGWTW07
MIC 256Mx16, MT41J256M16HA-093G:E QBC PN : AKD5PZSTL01---TOP B/S PN : AKD5PZSTL00
SAM 256Mx16, K4W4G1646D-BC1A QBC PN : AKD5PGWT501---TOP B/S PN : AKD5PGWT502

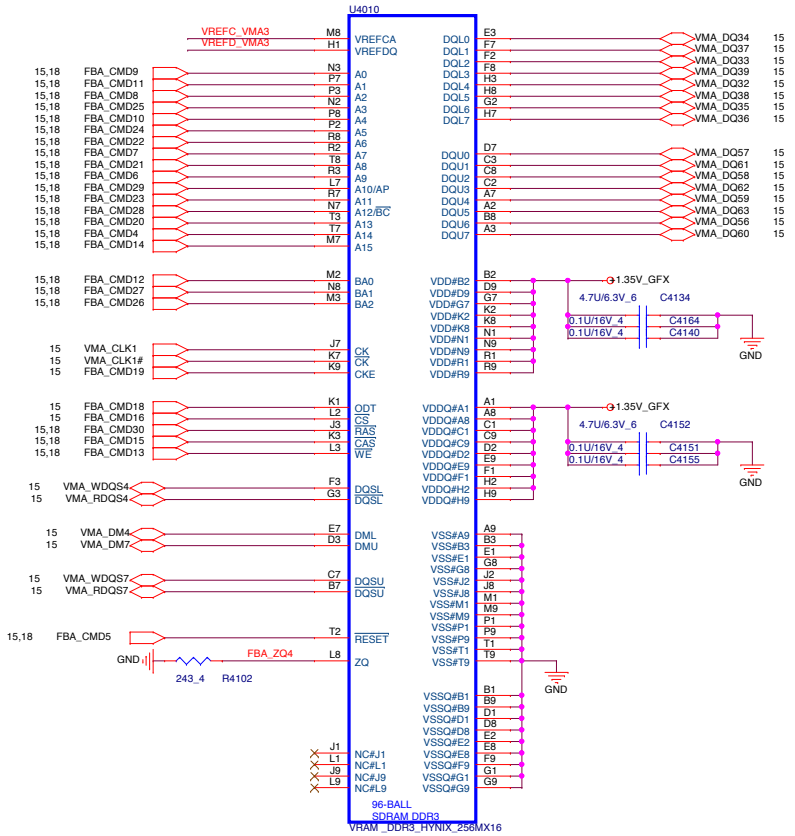

162_1% ohm CS11622FB07 RES CHIP 162 1/16W +-1%(0402)
CS11622FB15 RES CHIP 162 1/16W +-1%(0402)

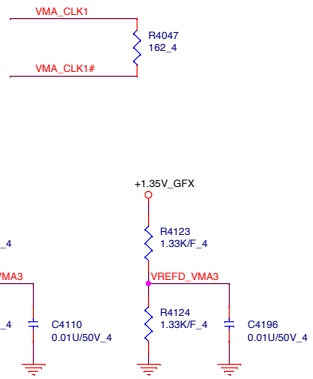

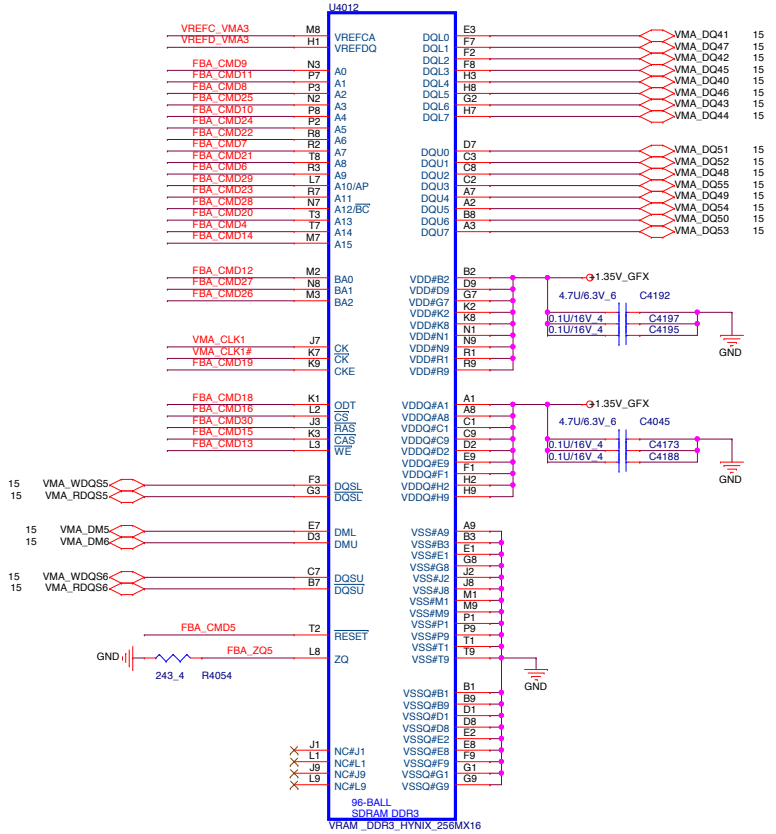

FOR EMI Request

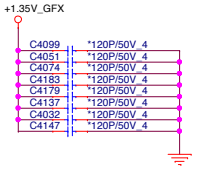

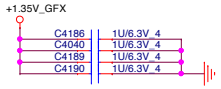

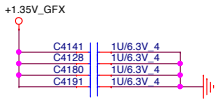

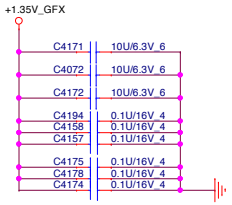

NB5/RD3

PROJECT : X12
Quanta Computer Inc.

Size	Document Number	Rev
Custom	DDR3L - RANK0	1A

Date: Wednesday, March 04, 2015 Sheet 20of 40

NB5

PROJECT :Y05
Quanta Computer Inc.

Size	Document Number	Rev
Custom	DDR3L - RANK1	1A

Date: Wednesday, March 04, 2015 | Sheet 21 of 40

RTD2136 Dual Channel only

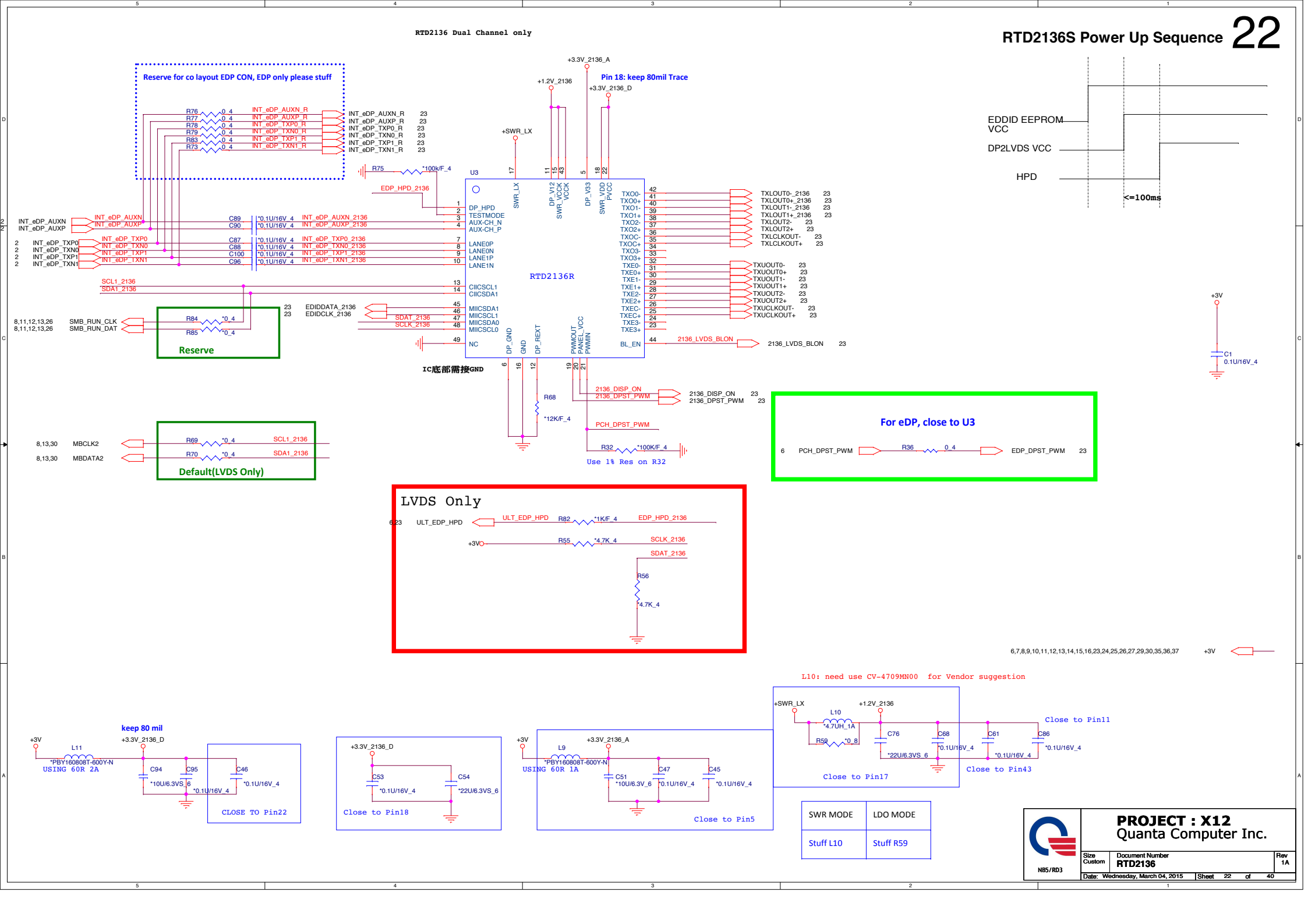

SWR MODE	LDO MODE
Stuff L10	Stuff R59

PROJECT : X12
Quanta Computer Inc.

Size	Document Number	Rev
Custom	RTD2136	1A

Date: Wednesday, March 04, 2015 Sheet 22 of 40

NB5/RD3

LID Switch

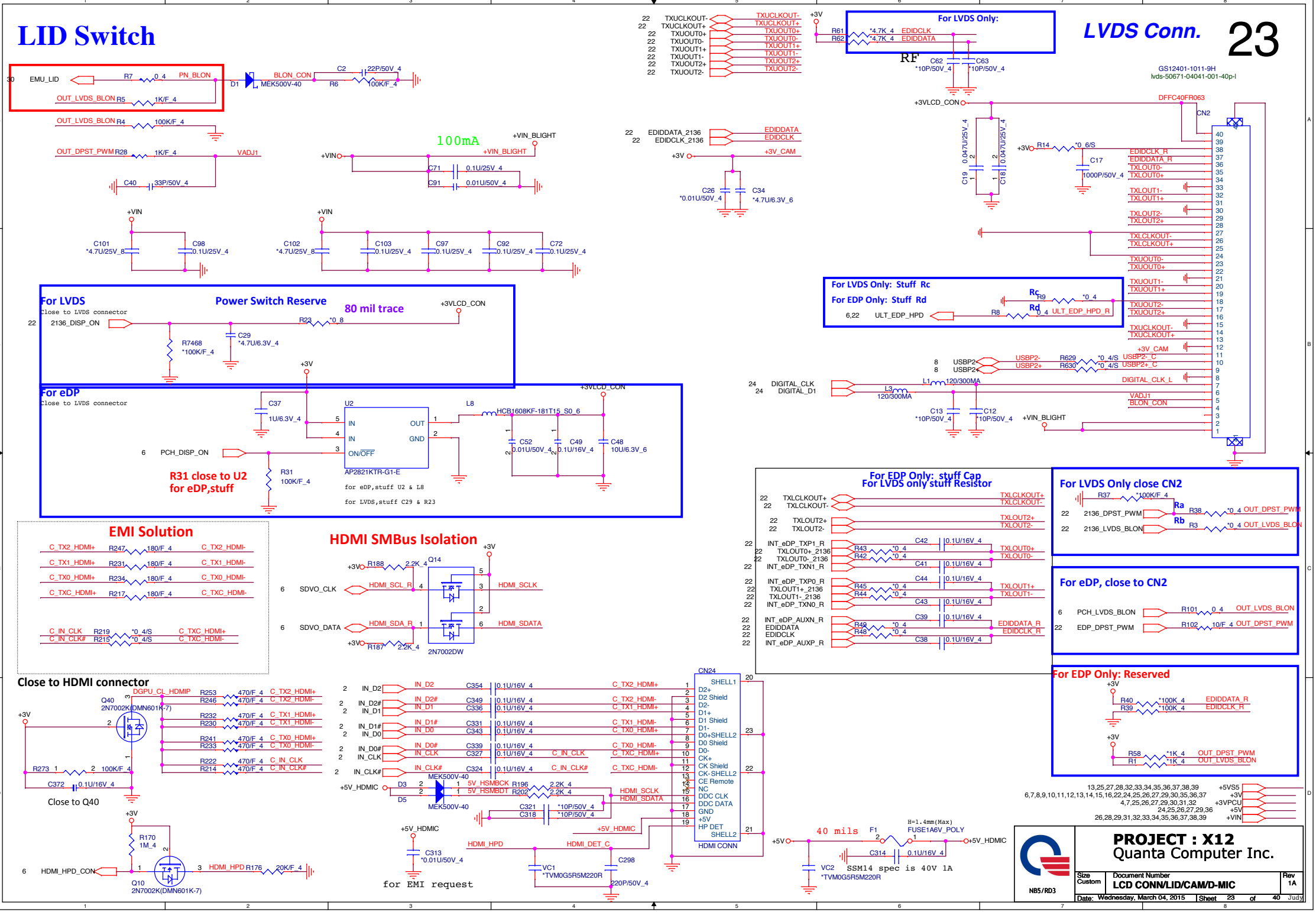
LVDS Conn.
23
For LVDS Only:
RF
GS12401-1011-9H
lvds-50671-04041-001-40p-l
DFFC40FR063
CN2
100mA
For LVDS
Close to LVDS connector
Power Switch Reserve
80 mil trace
For LVDS Only: Stuff Rc
For EDP Only: Stuff Rd
For eDP
Close to LVDS connector
R31 close to U2
for eDP,stuff
AP2821KTR-G1-E
for eDP,stuff U2 & L8
for LVDS,stuff C29 & R23
For EDP Only: stuff Cap
For LVDS only stuff Resistor
For LVDS Only close CN2
For eDP, close to CN2
For EDP Only: Reserved
EMI Solution
HDMI SMBus Isolation
2N7002DW
Close to HDMI connector
Close to Q40
Q40
2N7002K(DMN601K-7)
Q10
2N7002K(DMN601K-7)
CN24
HDMI CONN
for EMI request
SSM14 spec is 40V 1A
FUSE1A6V_POLY
PROJECT : X12
Quanta Computer Inc.
NB5/RD3
Size Custom
Document Number
LCD CONN/LID/CAM/D-MIC
Rev 1A
Date: Wednesday, March 04, 2015
Sheet 23 of 40
Judy

Audio Codec

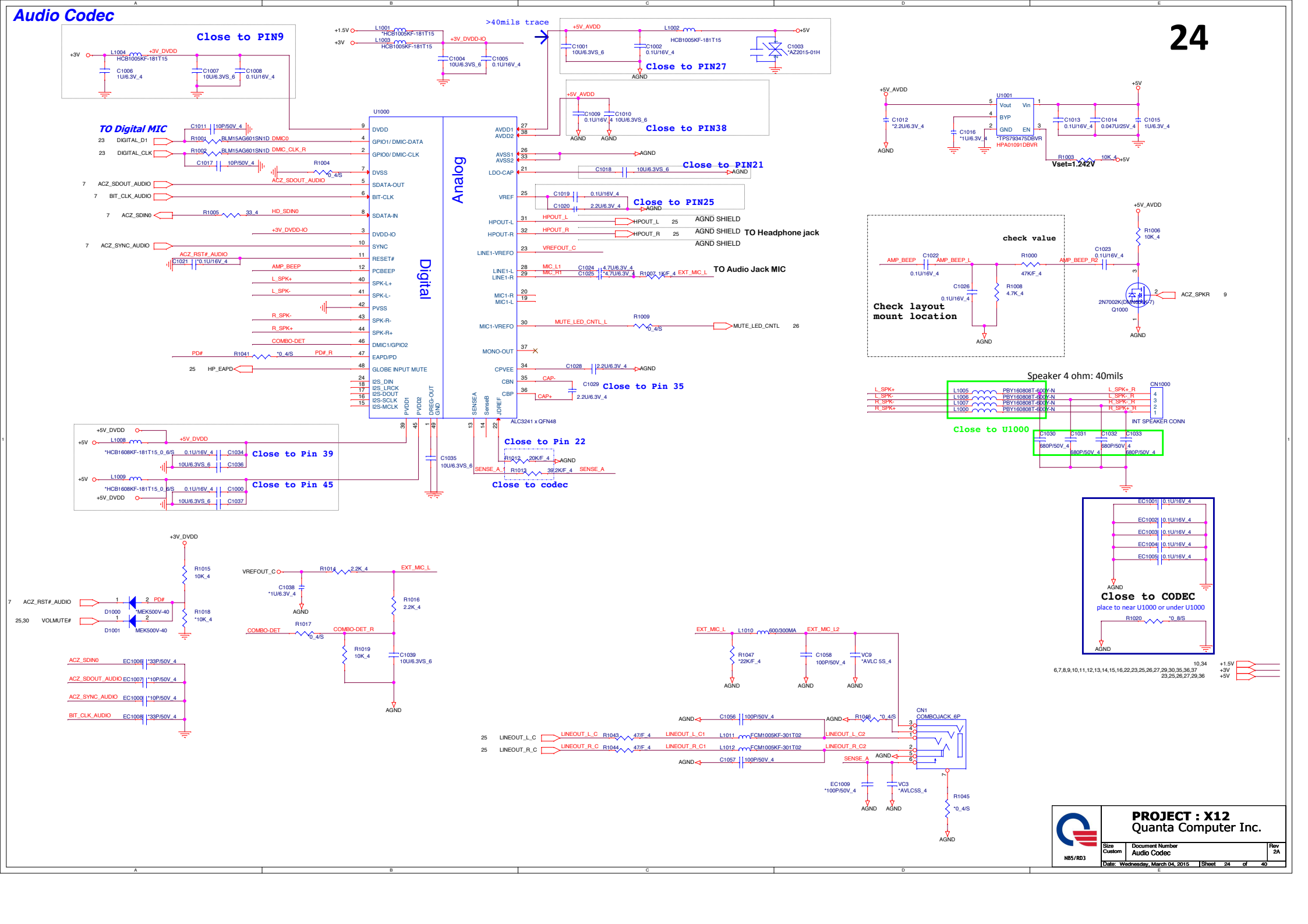
Close to PIN9
+3V
L1004 HCB1005KF-181T15
+3V_DVDD
C1006 1U/6.3V_4
C1007 10U/6.3VS_6
C1008 0.1U/16V_4
+1.5V
L1001 *HCB1005KF-181T15
+3V
L1003 HCB1005KF-181T15
+3V_DVDD-IO
C1004 10U/6.3VS_6
C1005 0.1U/16V_4
>40mils trace
+5V_AVDD
L1002 HCB1005KF-181T15
+5V
C1001 10U/6.3VS_6
C1002 0.1U/16V_4
C1003 *AZ2015-01H
Close to PIN27
AGND
+5V_AVDD
C1009 0.1U/16V_4
C1010 10U/6.3VS_6
Close to PIN38
AGND
AGND
TO Digital MIC
U1000
Analog
Digital
DVDD
GPIO1/ DMIC-DATA
GPIO0/ DMIC-CLK
DVSS
SDATA-OUT
BIT-CLK
SDATA-IN
DVDD-IO
SYNC
RESET#
PCBEEP
SPK-L+
SPK-L-
PVSS
SPK-R-
SPK-R+
DMIC1/GPIO2
EAPD/PD
GLOBE INPUT MUTE
I2S_DIN
I2S_LRCK
I2S-DOUT
I2S-SCLK
I2S-MCLK
PVDD1
PVDD2
DREG-OUT
GND
SENSEA
SenseB
JDREF
AVDD1
AVDD2
AVSS1
AVSS2
LDO-CAP
VREF
HPOUT-L
HPOUT-R
LINE1-VREFO
LINE1-L
LINE1-R
MIC1-R
MIC1-L
MIC1-VREFO
MONO-OUT
CPVEE
CBN
CBP
ALC3241 x QFN48
DIGITAL_D1
DIGITAL_CLK
DMIC0
DMIC_CLK_R
ACZ_SDOUT_AUDIO
BIT_CLK_AUDIO
ACZ_SDIN0
HD_SDIN0
ACZ_SYNC_AUDIO
ACZ_RST#_AUDIO
AMP_BEEP
L_SPK+
L_SPK-
R_SPK-
R_SPK+
COMBO-DET
PD#
PD#_R
HP_EAPD
Close to PIN21
Close to PIN25
AGND SHIELD
TO Headphone jack
HPOUT_L
HPOUT_R
VREFOUT_C
TO Audio Jack MIC
EXT_MIC_L
MUTE_LED_CNTL_L
MUTE_LED_CNTL
Close to Pin 35
CAP-
CAP+
Close to Pin 22
Close to codec
SENSE_A
Close to Pin 39
Close to Pin 45
+5V_DVDD
L1008 *HCB1608KF-181T15_0_6/S
L1009 *HCB1608KF-181T15_0_6/S
C1035 10U/6.3VS_6
+5V_AVDD
C1012 *2.2U/6.3V_4
U1001
Vout
Vin
BYP
GND
EN
*TPS793475DBVR
HPA01091DBVR
C1013 0.1U/16V_4
C1014 0.047U/25V_4
C1015 1U/6.3V_4
C1016 *1U/6.3V_4
R1003 10K_4
Vset=1.242V
check value
Check layout mount location
AMP_BEEP
C1022 0.1U/16V_4
AMP_BEEP_L
R1000 47K/F_4
AMP_BEEP_R2
C1023 0.1U/16V_4
C1026 0.1U/16V_4
R1008 4.7K_4
R1006 10K_4
2N7002K(DMN66D7)
Q1000
ACZ_SPKR
Speaker 4 ohm: 40mils
CN1000
INT SPEAKER CONN
Close to U1000
C1030 680P/50V_4
C1031 680P/50V_4
C1032 680P/50V_4
C1033 680P/50V_4
EC1001 0.1U/16V_4
EC1002 0.1U/16V_4
EC1003 0.1U/16V_4
EC1004 0.1U/16V_4
EC1005 0.1U/16V_4
Close to CODEC
place to near U1000 or under U1000
R1020 *0_8/S
+3V_DVDD
R1015 10K_4
R1018 *10K_4
D1000 *MEK500V-40
D1001 MEK500V-40
VOLMUTE#
VREFOUT_C
R1014 2.2K_4
C1038 *1U/6.3V_4
R1016 2.2K_4
R1017 *0_4/S
R1019 10K_4
C1039 10U/6.3VS_6
EC1006 *33P/50V_4
EC1007 *10P/50V_4
EC1008 *33P/50V_4
EXT_MIC_L
L1010 600/300MA
EXT_MIC_L2
R1047 *22K/F_4
C1058 100P/50V_4
VC9 *AVLC 5S_4
LINEOUT_L_C
LINEOUT_R_C
R1043 47/F_4
R1044 47/F_4
LINEOUT_L_C1
LINEOUT_R_C1
L1011 FCM1005KF-301T02
L1012 FCM1005KF-301T02
C1056 100P/50V_4
C1057 100P/50V_4
R1046 *0_4/S
CN1 COMBOJACK_6P
LINEOUT_L_C2
LINEOUT_R_C2
EC1009 *100P/50V_4
VC3 *AVLCSS_4
R1045 *0_4/S
+1.5V
+3V
+5V
NB5/RD3
PROJECT : X12
Quanta Computer Inc.
Size Custom
Document Number Audio Codec
Rev 2A
Date: Wednesday, March 04, 2015
Sheet 24 of 40

Head Phone out

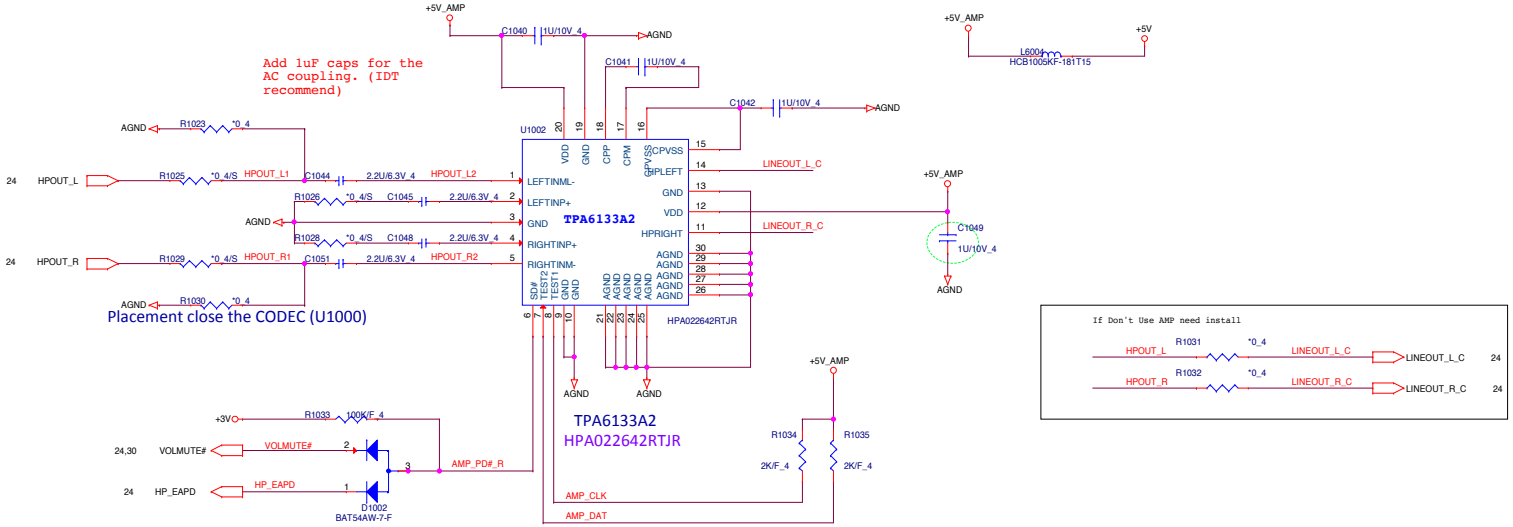

HOLE

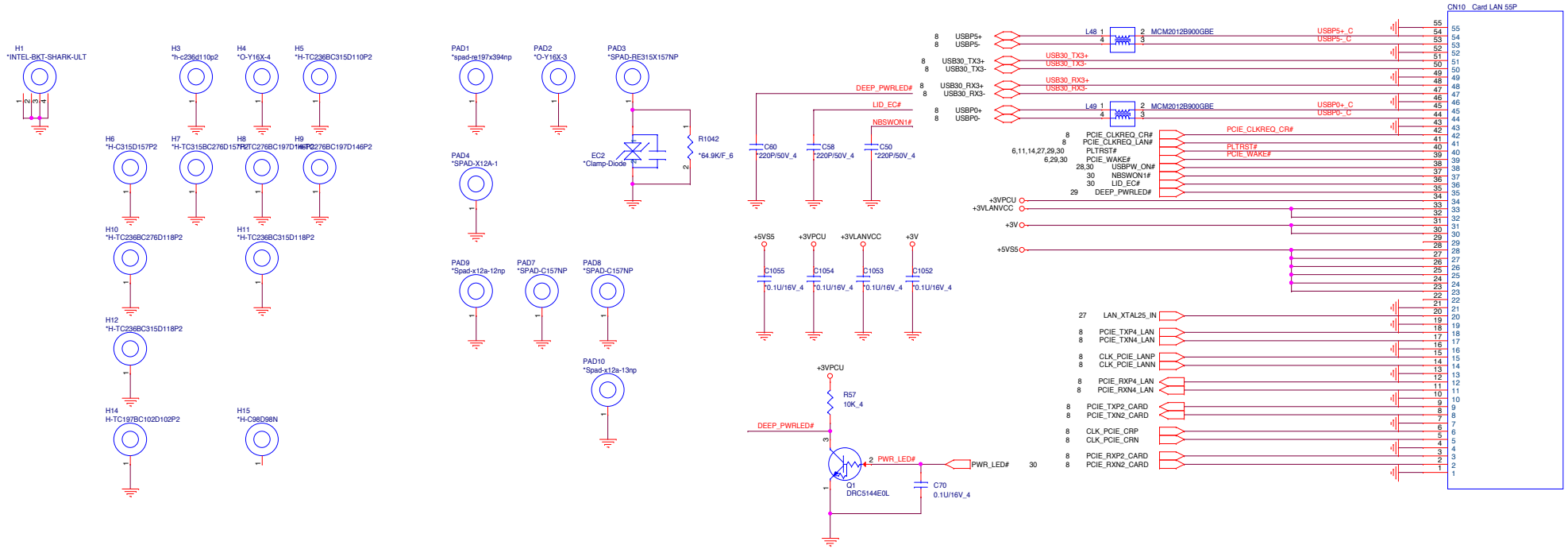

NB5/RD3	**PROJECT : X12** Quanta Computer Inc.	
Size C	Document Number **Card Reader**	Rev 1A
Date: Wednesday, March 04, 2015	Sheet 25 of 40	

Touch Pad Connector

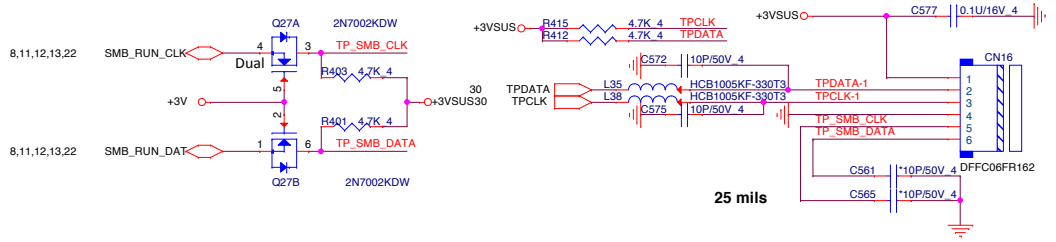

KEYBOARD Con.

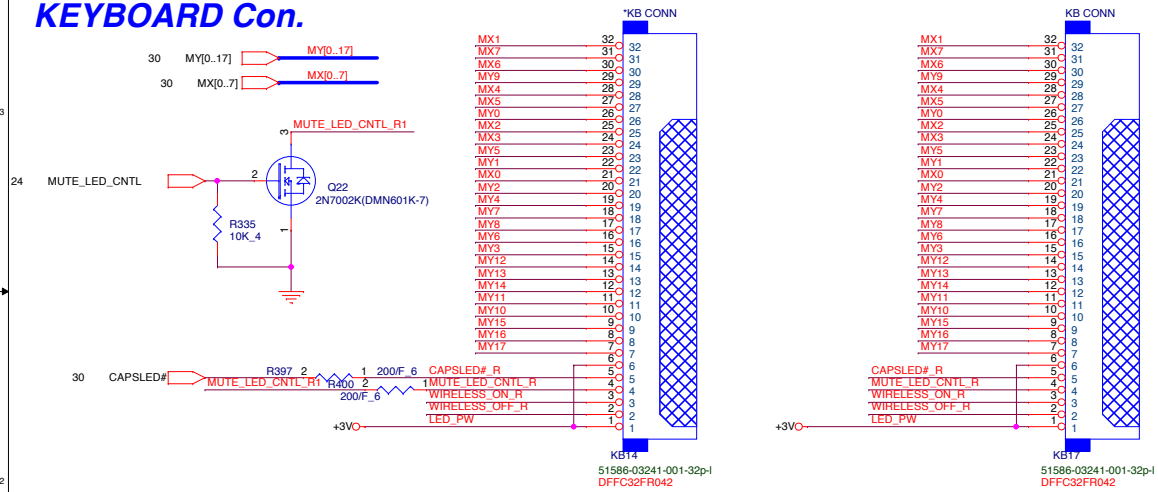

FAN

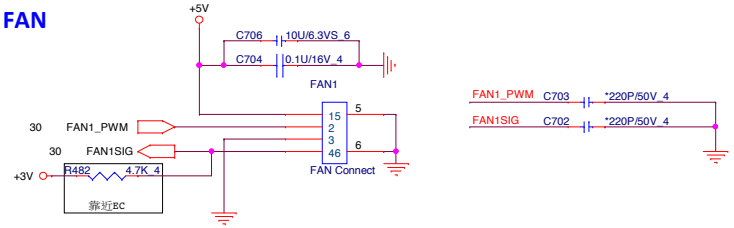

KEYBOARD PULL-UP

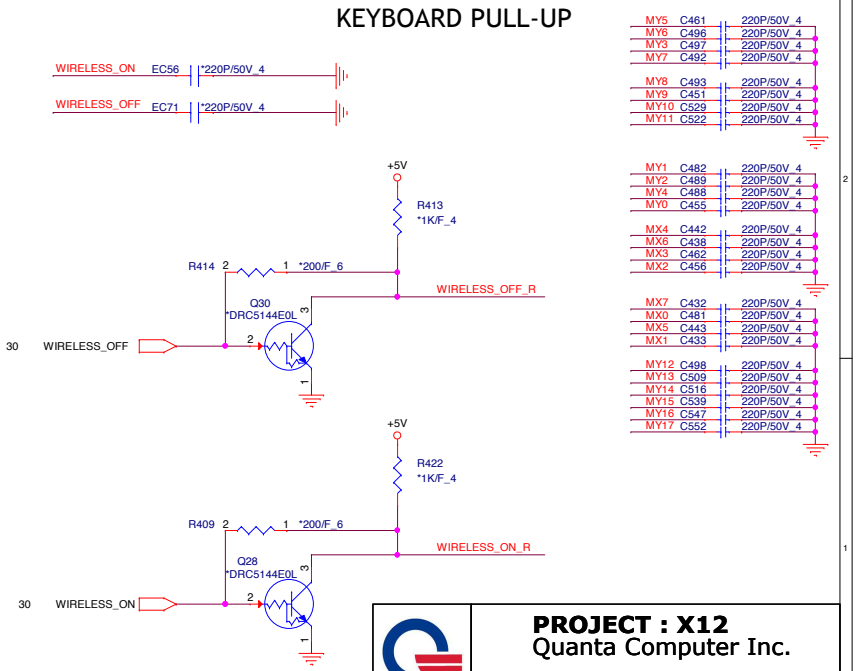

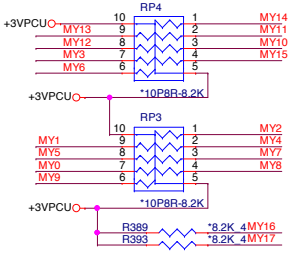

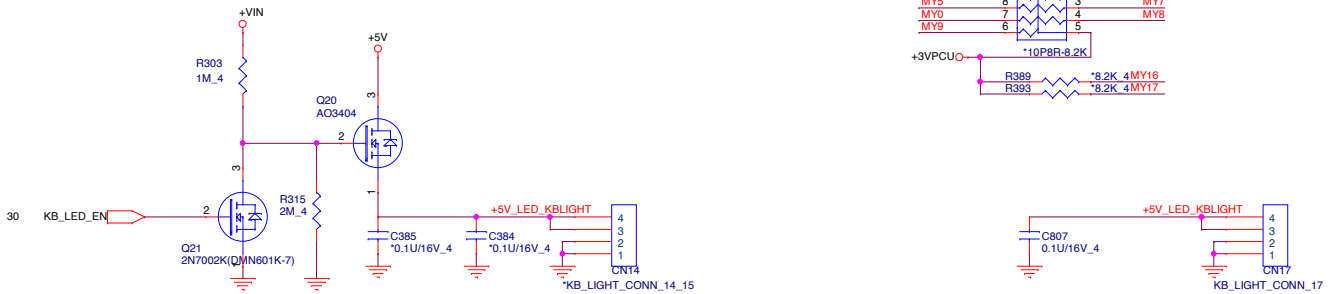

N85/RD3

PROJECT : X12
Quanta Computer Inc.

Size	Document Number	Rev
Custom	PB/TP/KB/FAN/EMI Cap	1A

Date: Wednesday, March 04, 2015 Sheet 26 of 40

TPM (2.0)

Address

	BADD
HIGH	4EH/4F (default)

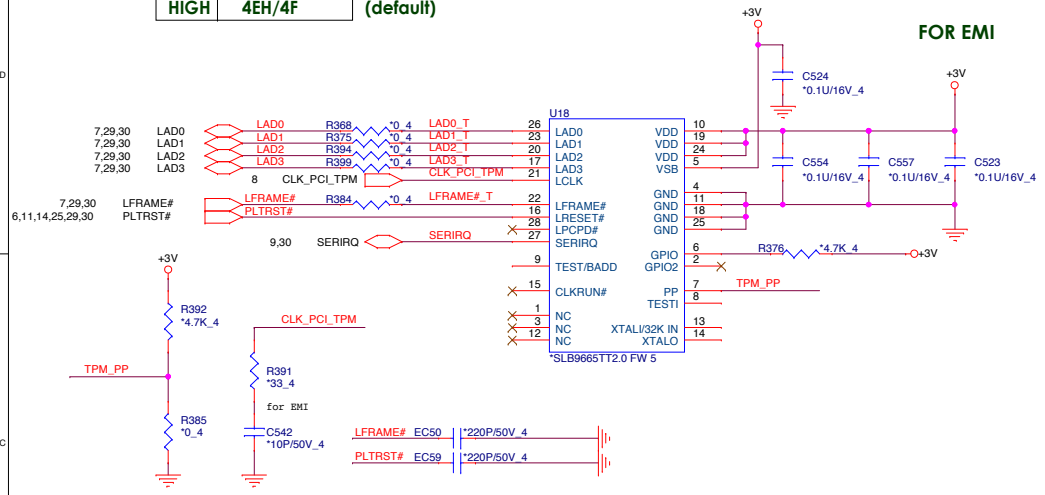

Accelerometer Sensor

G-Sensor Power need check

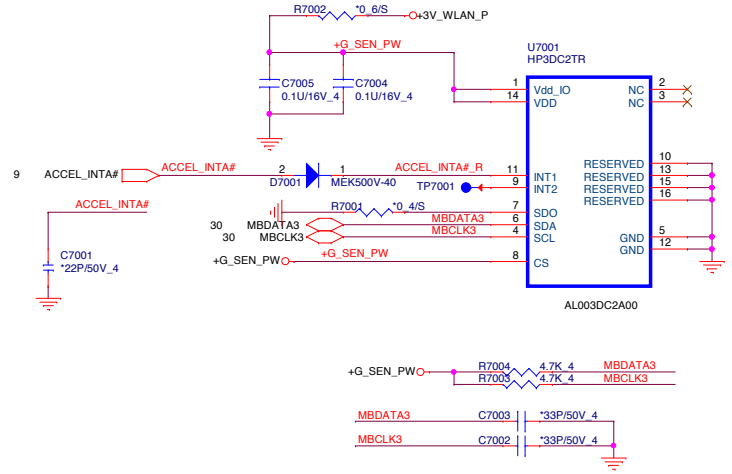

Touch screen

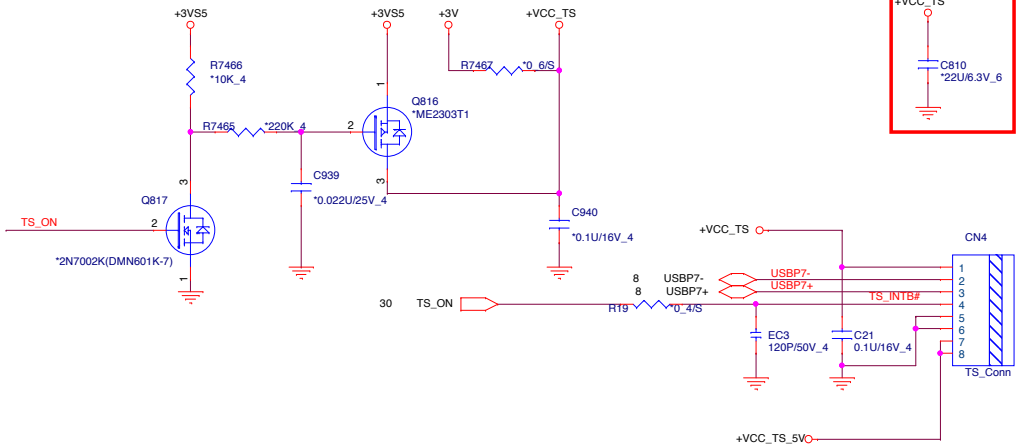

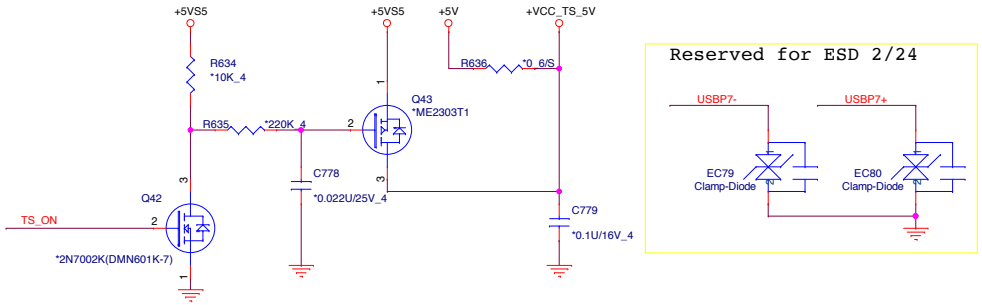

ADD for ON-SELL touch

Green CLK Circuitry

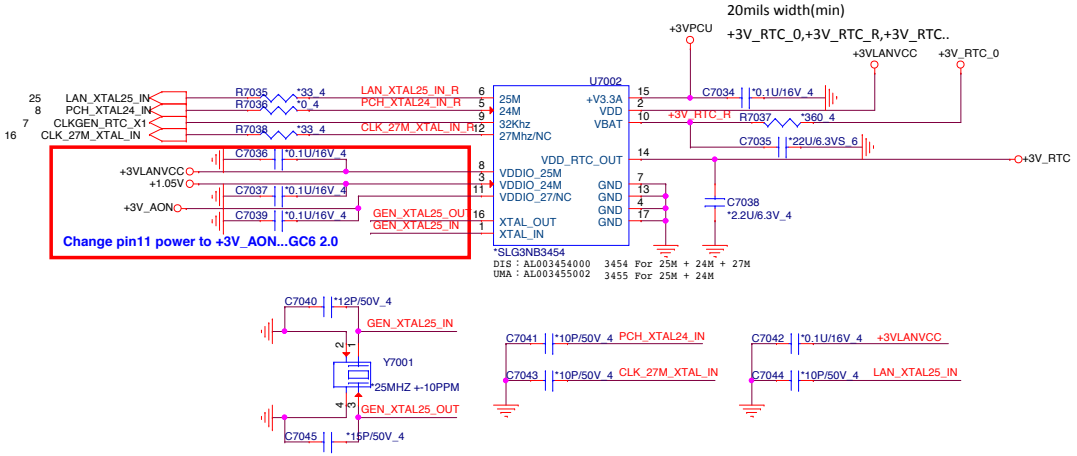

N85/RD3	**PROJECT : X12** Quanta Computer Inc.	
Size Custom	Document Number TPM/G-Sensor/G-CLK/TS/FP	Rev 1A
Date: Wednesday, March 04, 2015	Sheet 27of 40	

USB 2.0/3.0 Combo

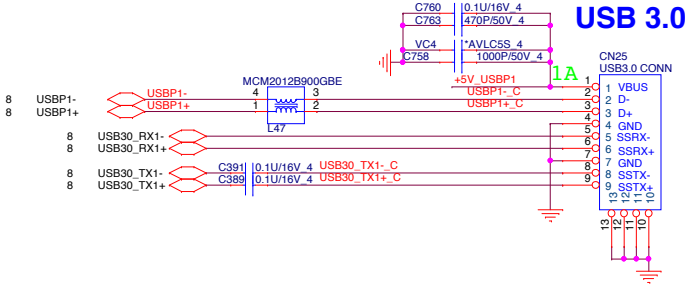

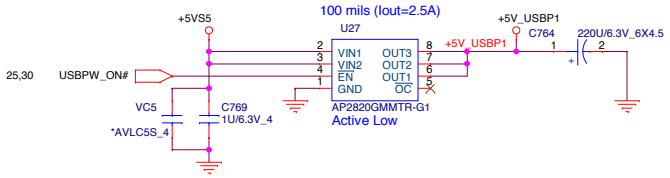

EMI CAP

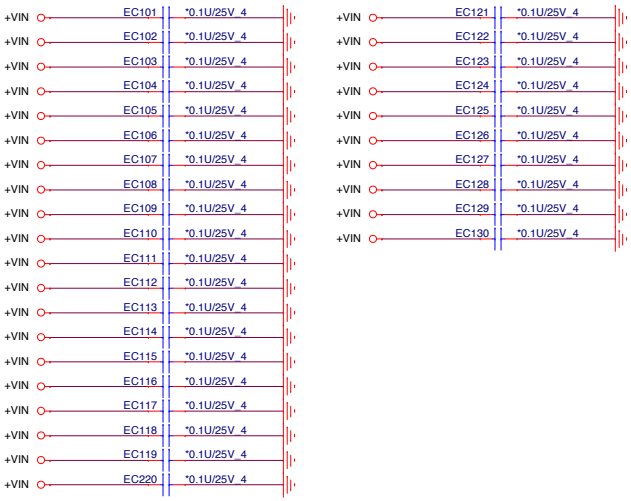

PROJECT : X12
Quanta Computer Inc.

Size	Document Number	Rev
Custom	USB 3.0	1A

N85/RD3

Date: Wednesday, March 04, 2015 Sheet 28 of 40

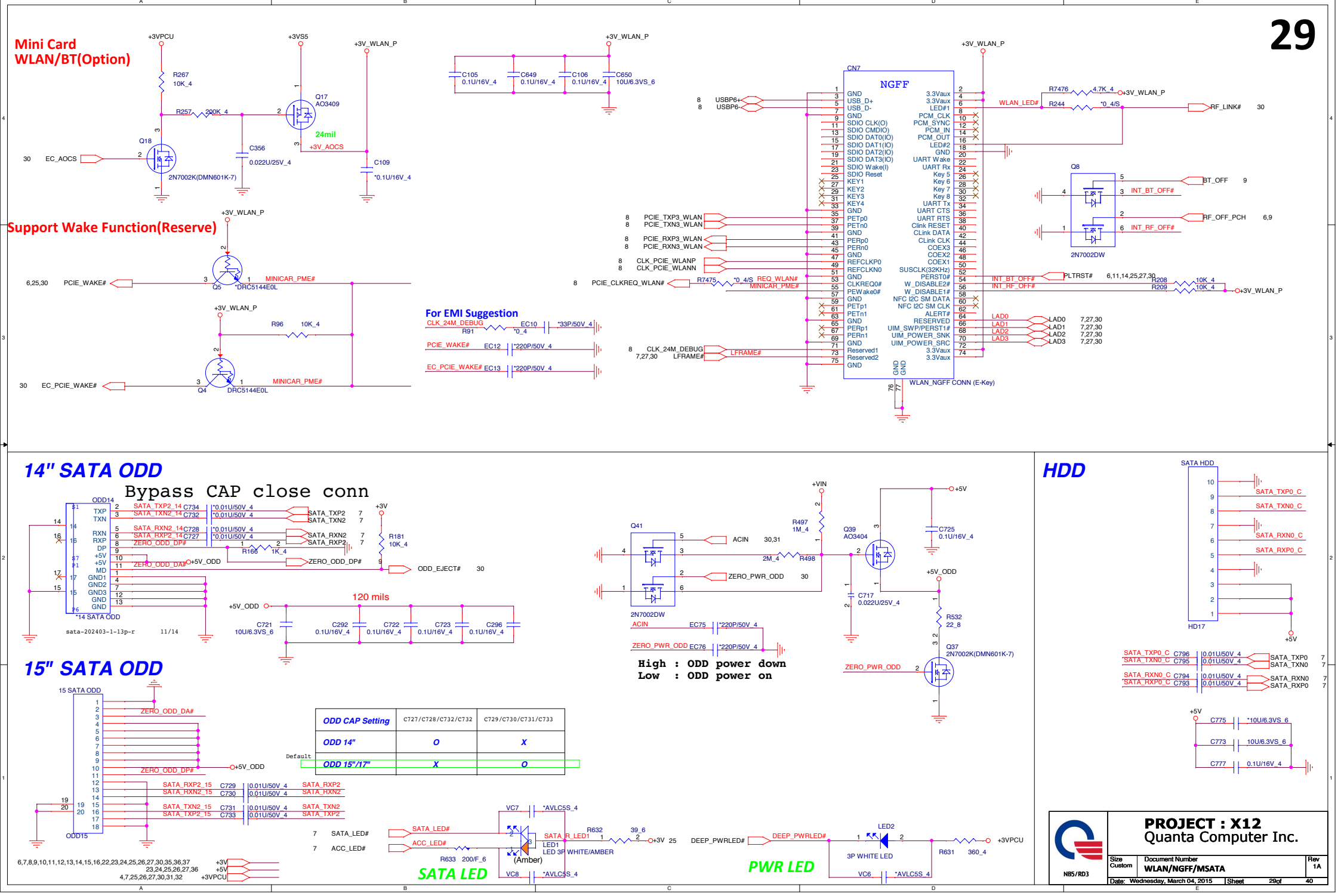
Mini Card
WLAN/BT(Option)
Support Wake Function(Reserve)
For EMI Suggestion
NGFF
CN7
WLAN_NGFF CONN (E-Key)
2N7002DW
2N7002K(DMN601K-7)
DRC5144E0L
14" SATA ODD
Bypass CAP close conn
15" SATA ODD
HDD
SATA LED
PWR LED
ODD CAP Setting
ODD 14"
ODD 15"/17"
High : ODD power down
Low : ODD power on
PROJECT : X12
Quanta Computer Inc.
WLAN/NGFF/MSATA
Date: Wednesday, March 04, 2015
Sheet 29of 40

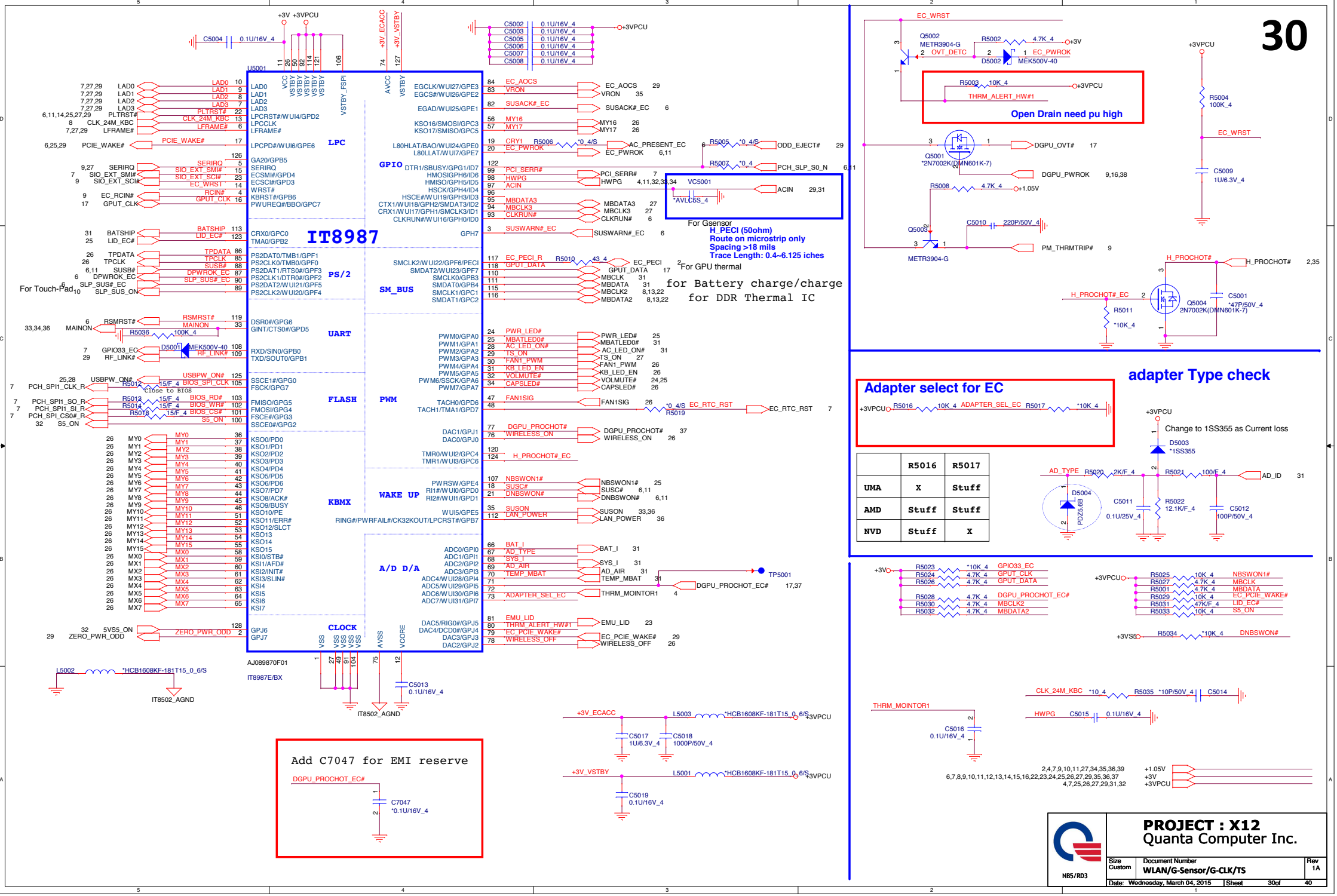

	R5016	R5017
UMA	X	Stuff
AMD	Stuff	Stuff
NVD	Stuff	X

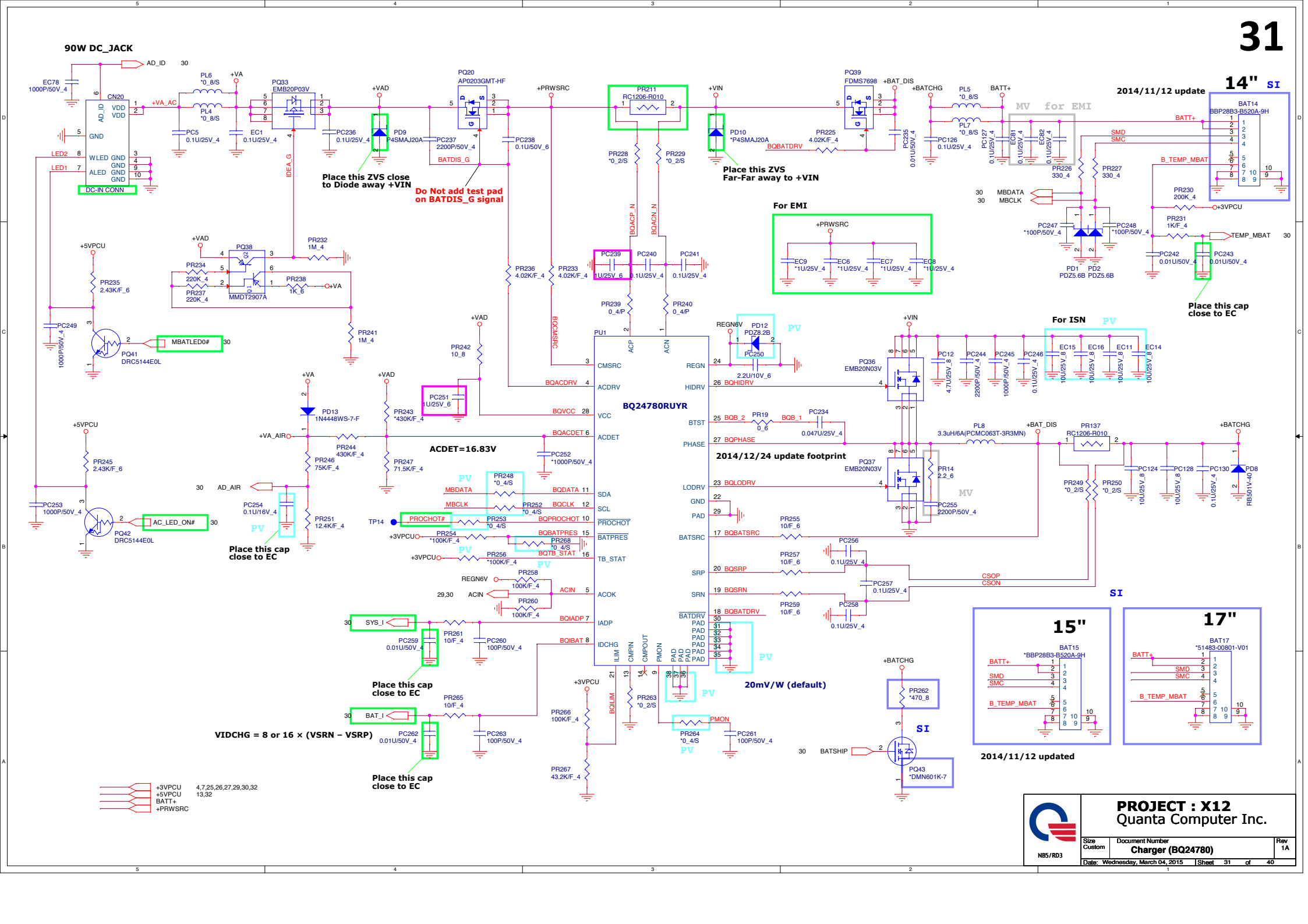

PROJECT : X12
Quanta Computer Inc.

Size	Document Number	Rev
Custom	Charger (BQ24780)	1A

Date: Wednesday, March 04, 2015 | Sheet 31 of 40

N85/RD3

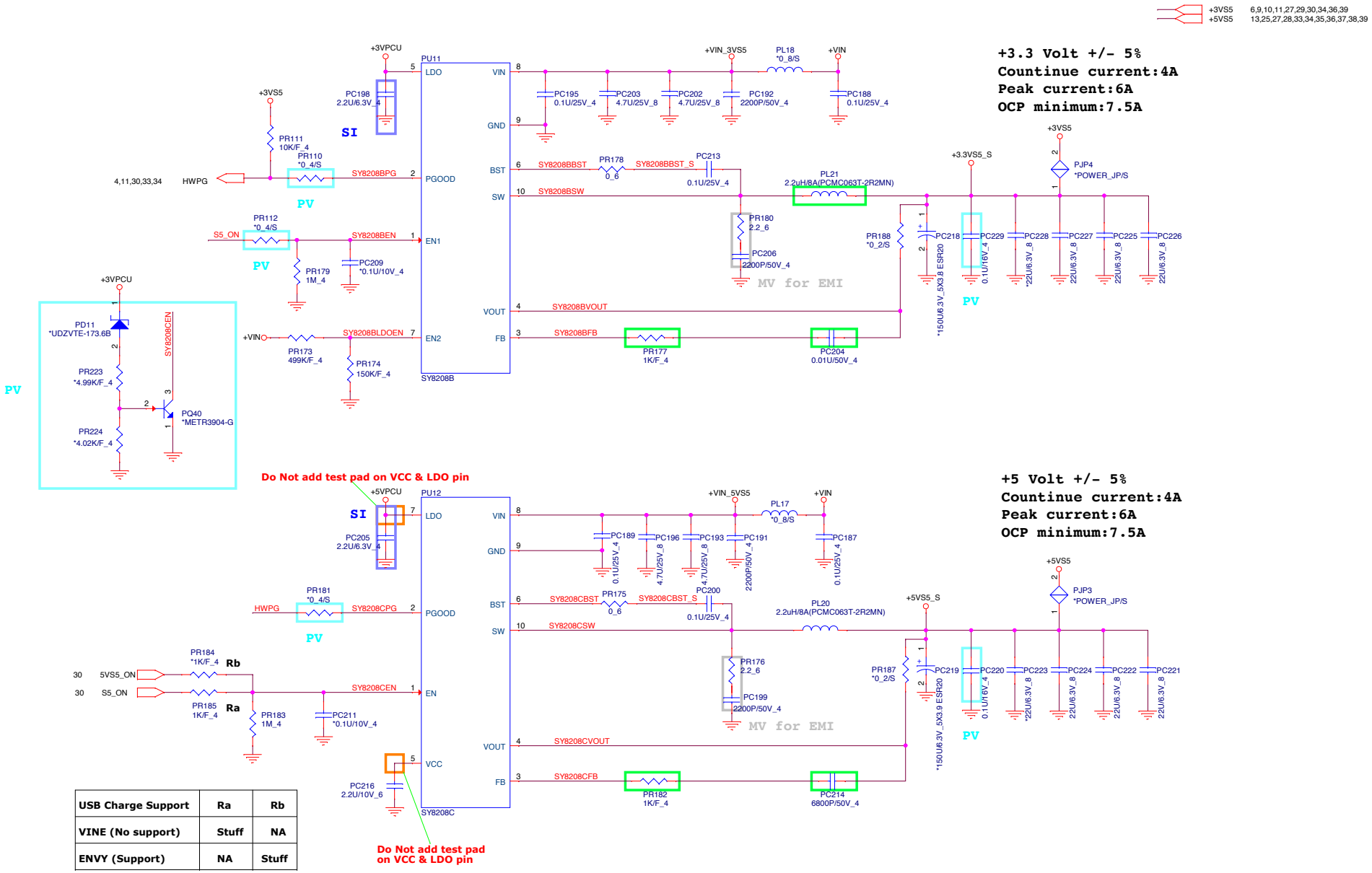

USB Charge Support	Ra	Rb
VINE (No support)	Stuff	NA
ENVY (Support)	NA	Stuff

PROJECT : X12
Quanta Computer Inc.

Size	Document Number	Rev
Custom	3/5VPCU(RT8243A)	1A

N85/RD3

Date: Wednesday, March 04, 2015 Sheet 32 of 40

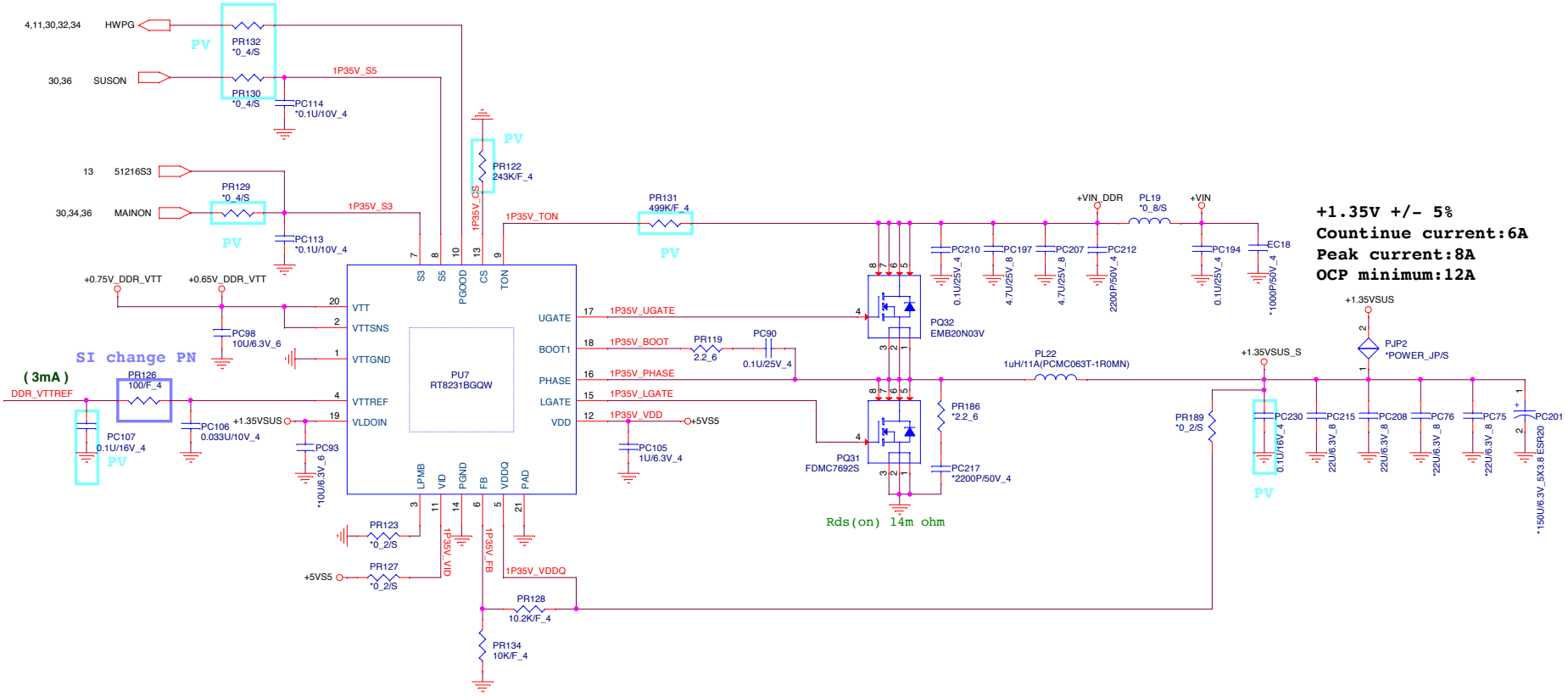

N85/RD3	**PROJECT : X12** Quanta Computer Inc.	
Size Custom	Document Number DDR3 (RT8231A)/1.8VS5	Rev 1A
Date: Wednesday, March 04, 2015	Sheet 33 of 40	

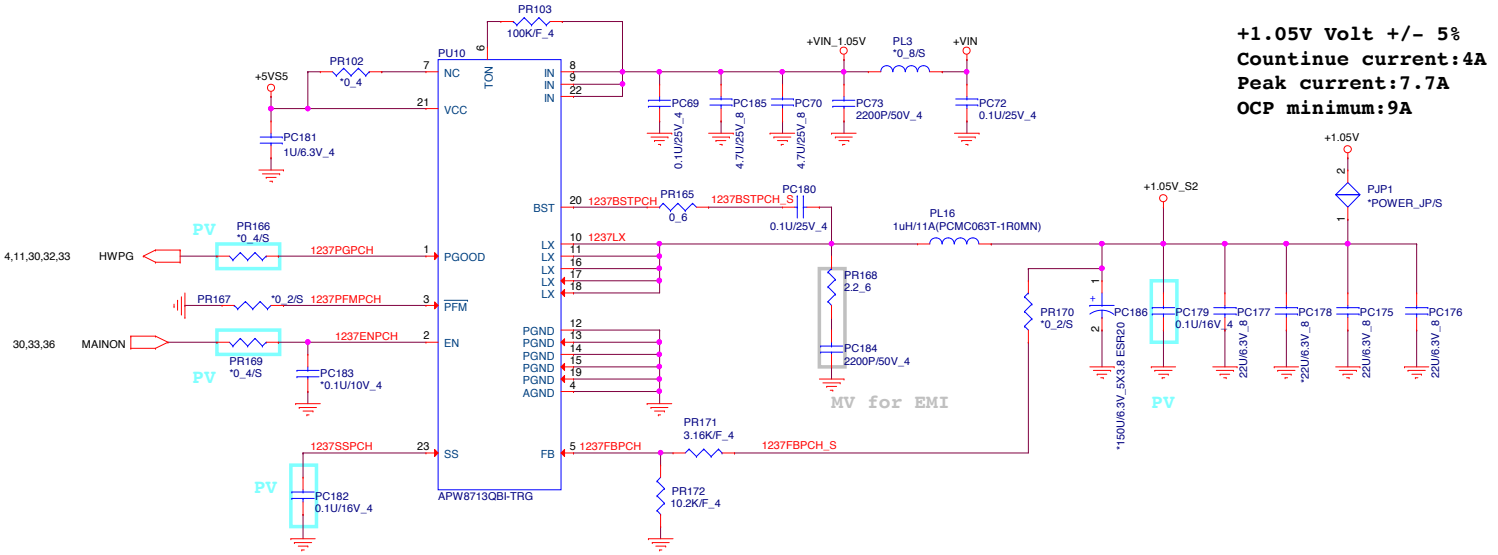

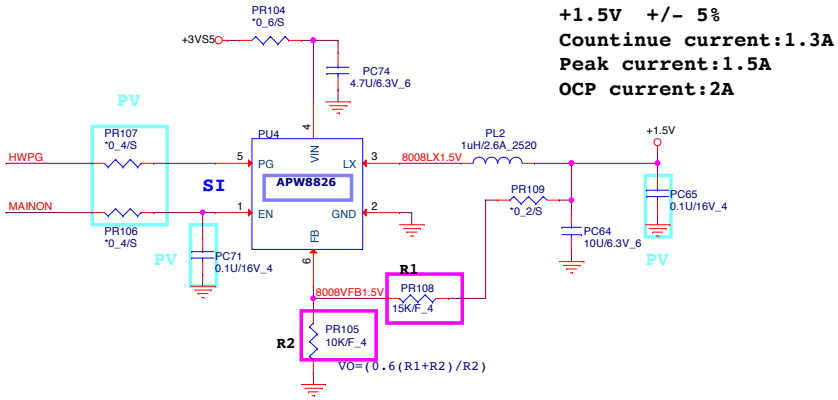

+VIN	23,26,28,29,31,32,33,35,36,37,38,39
+3VS5	6,9,10,11,27,29,30,32,36,39
+5VS5	13,25,27,28,32,33,35,36,37,38,39

PROJECT : X12
Quanta Computer Inc.

N85/RD3

Size	Document Number	Rev
Custom	+1.1VS5 (RT8228)/2.5V	1A

Date: Wednesday, March 04, 2015 | Sheet 34 of 40

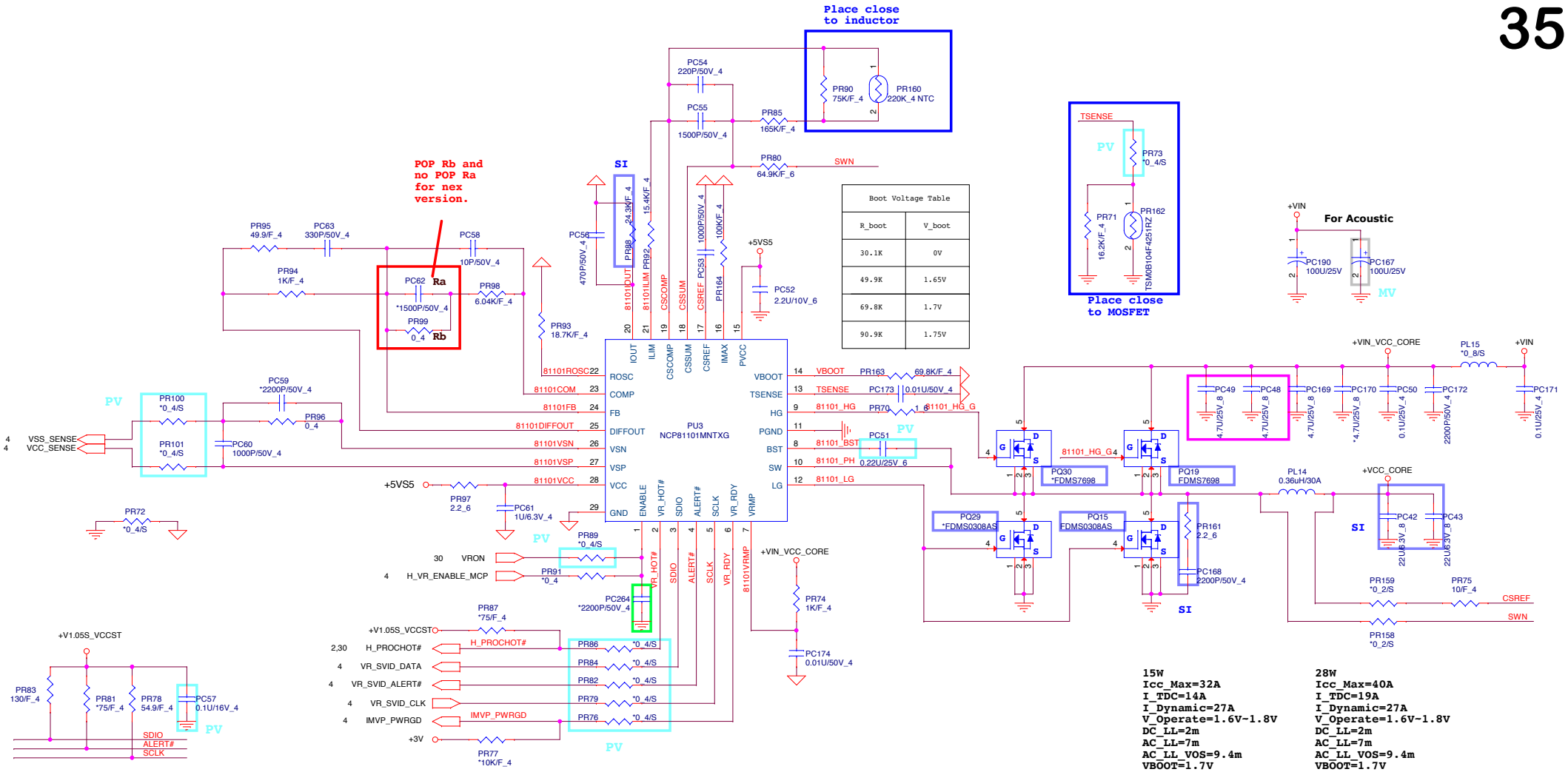

Boot Voltage Table	
R_boot	V_boot
30.1K	0V
49.9K	1.65V
69.8K	1.7V
90.9K	1.75V

PROJECT : X12
Quanta Computer Inc.

Size	Document Number	Rev
Custom	CPU Core (NCP81101)ULT	1A

N85/RD3

Date: Wednesday, March 04, 2015 Sheet 35 of 40

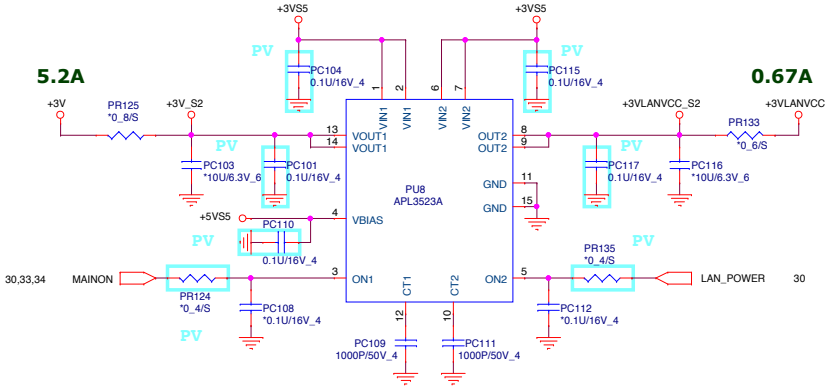

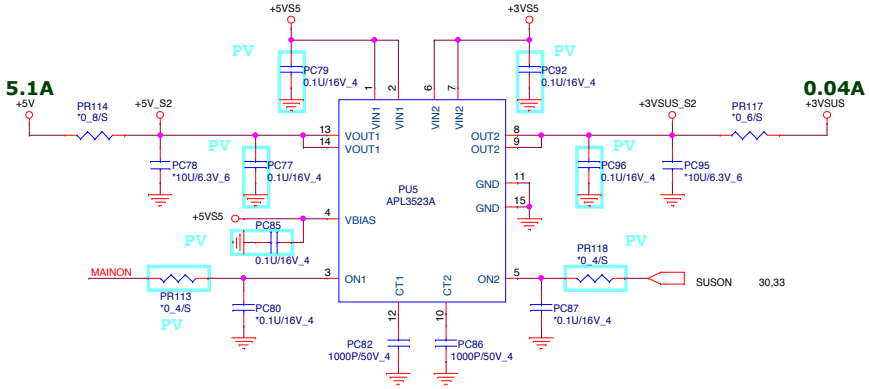

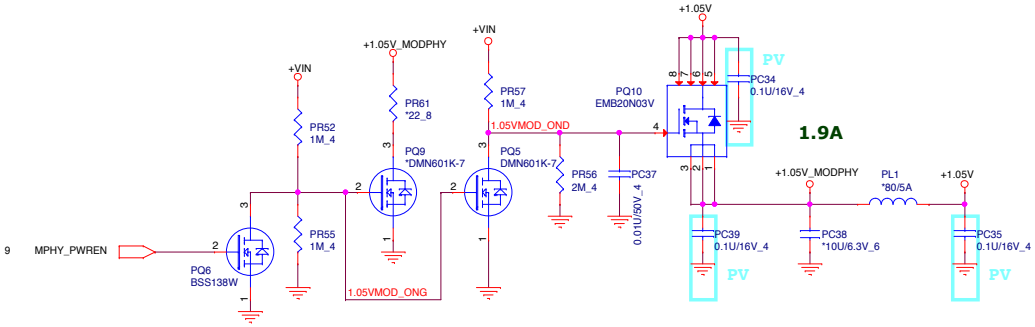

6,7,8,9,10,11,12,13,14,15,16,22,23,24,25,26,27,29,30,35,37	+3V
23,24,25,26,27,29	+5V
23,26,28,29,31,32,33,34,35,37,38,39	+VIN
6,9,10,11,27,29,30,32,34,39	+3VS5
13,25,27,28,32,33,34,35,37,38,39	+5VS5
25,27	+3VLANVCC

NB5/RD3

PROJECT : X12
Quanta Computer Inc.

Size	Document Number	Rev
Custom	Dis-charge IC (SLG55448)	1A

Date: Wednesday, March 04, 2015 Sheet 36 of 40

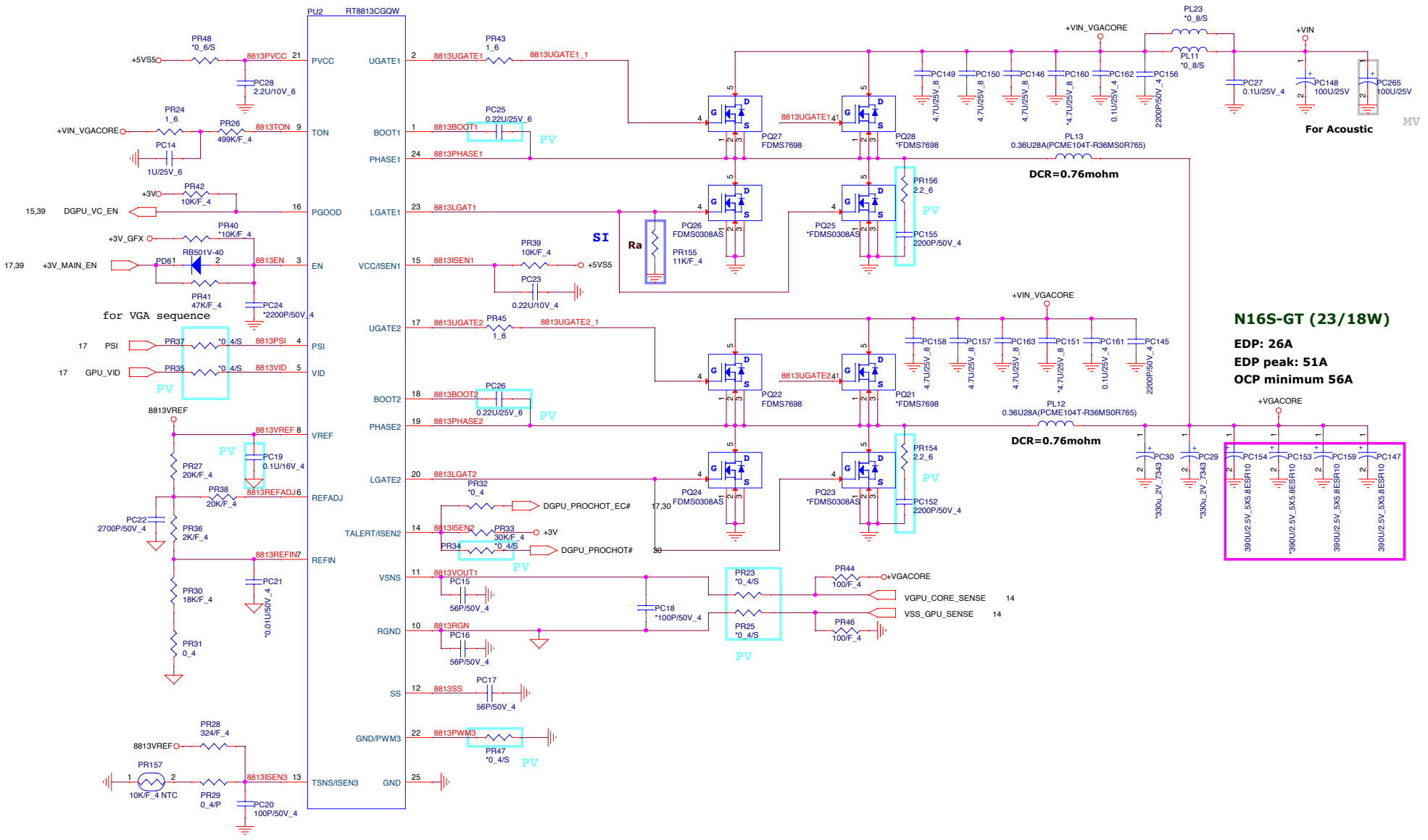

PROJECT : X12
Quanta Computer Inc.

Size	Document Number	Rev
Custom	+VGACORE (RT8813A)	?

Date: Wednesday, March 04, 2015 Sheet 37 of 40

N85/RD3

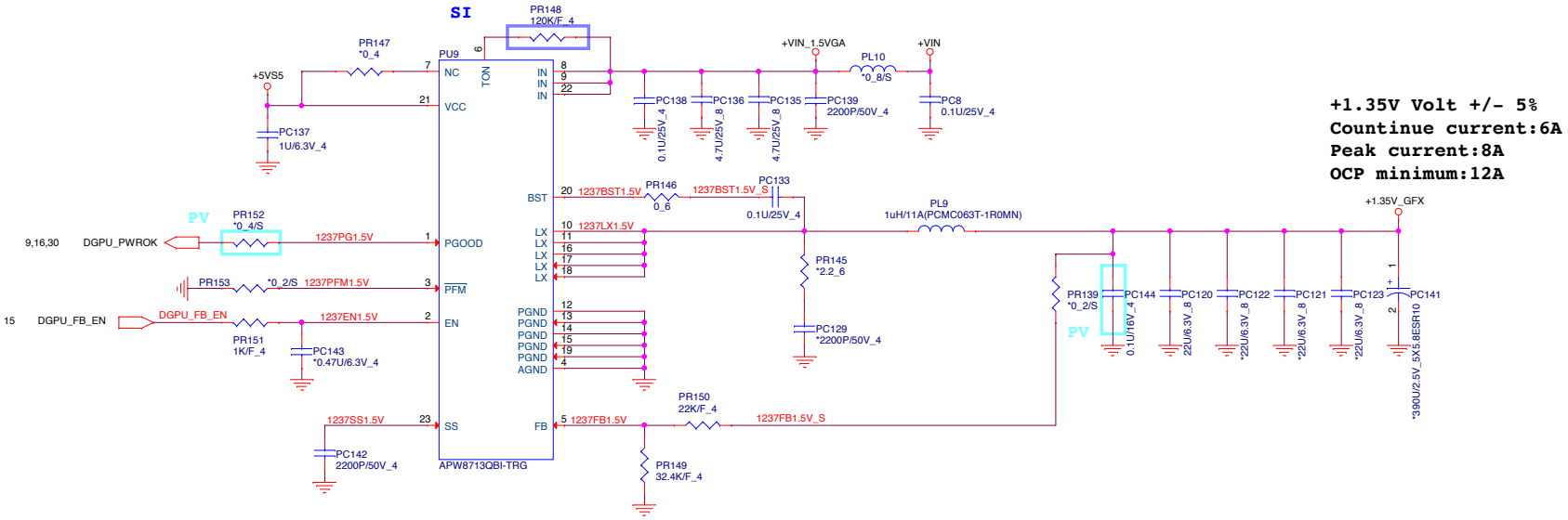

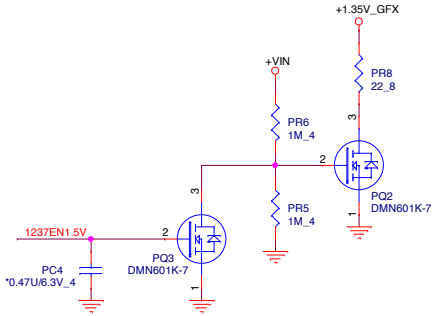

PROJECT : X12
Quanta Computer Inc.

Size	Document Number	Rev
Custom	+1.35V_VGA(AOZ1237)	1A

NB5/RD3

Date: Wednesday, March 04, 2015 | Sheet 38 of 40

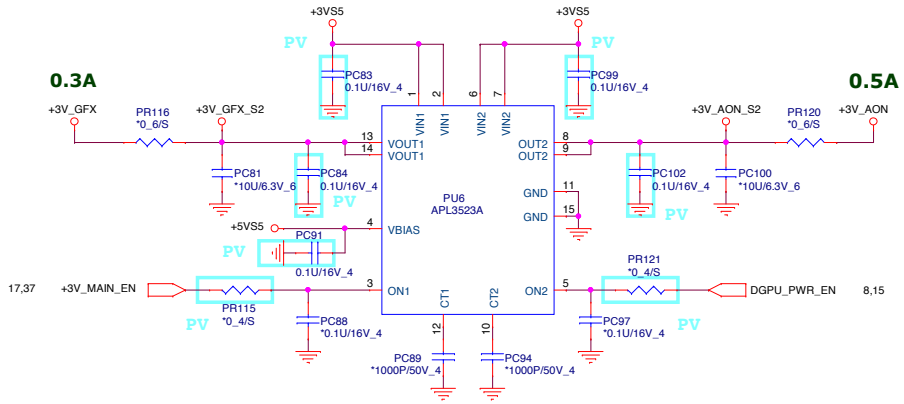

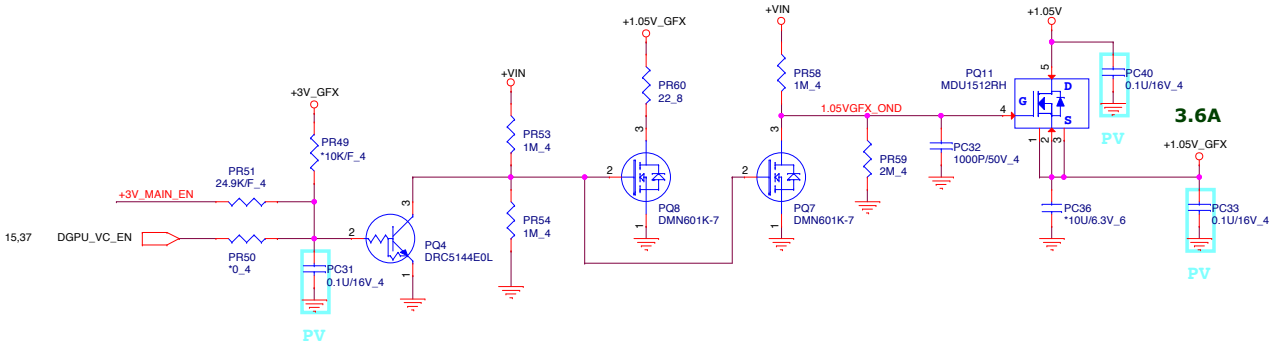

PROJECT : X12
Quanta Computer Inc.

Size	Document Number	Rev
Custom	1.05V_VGA/3V_VGA	?

Date: Wednesday, March 04, 2015 Sheet 39 of 40

N85/RD3

Battery Connector	Pavillion	ENVY
14"	-	-
15"	-	-
17"	-	-

USB Charge Support	PR185	PR184
Pavillion	Stuff	NA
ENVY (USB charge)	NA	Stuff

UMA	Disable Page 41、42、43 ,but keep below location
Page 41	PC161、PC162
Page 42	PC138、PC144、PC4、PC148
Page 43	PC84、PC102、PC88、PC97、PC40、PC33

Discrete	Location	Part Number
N15S (25W)	PR155	CS29532FB10
	PC151、PC160	NA
	PQ21、PQ23、PQ25、PQ28	NA
N15P (35W)	PR155	CS31242FB13
	PC151、PC160	Stuff
	PQ21、PQ23、PQ25、PQ28	Stuff