PROTECTION CC
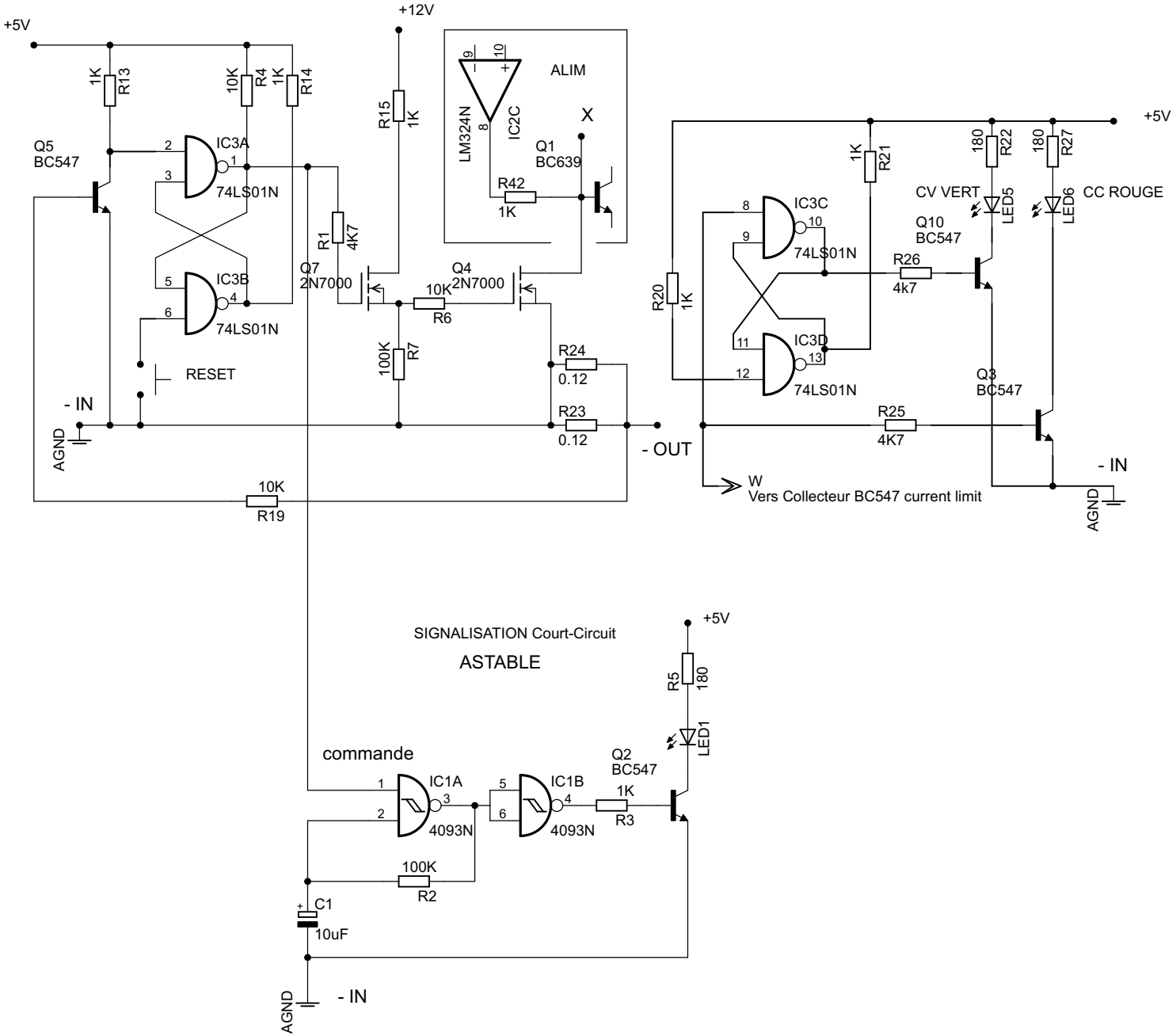
COMMUTATION LEDS CV-CC