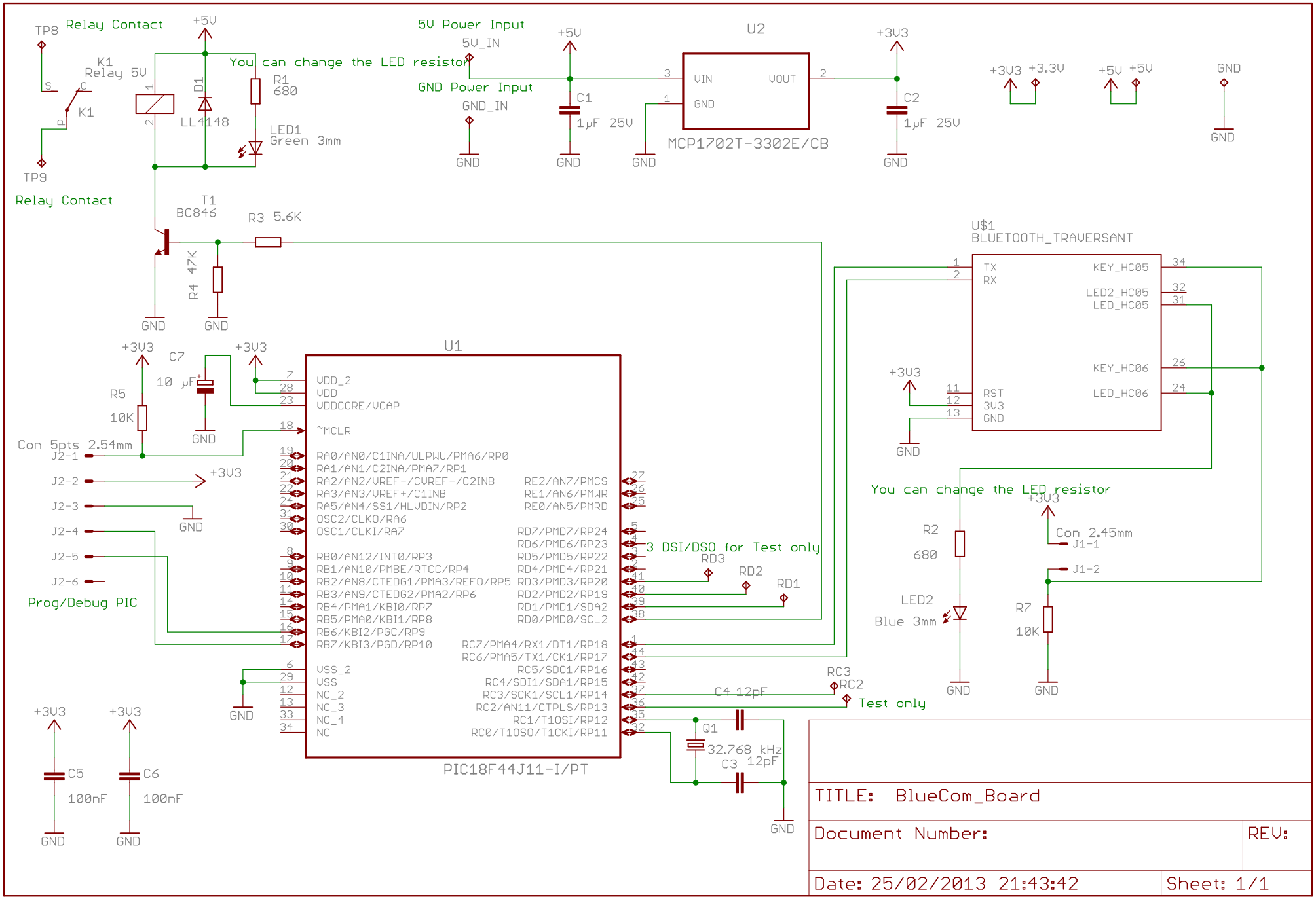
TP8
Relay Contact
+5V
K1
Relay 5V
S
K1
TP9
Relay Contact
D1
LL4148
You can change the LED resistor
R1
680
LED1
Green 3mm
5V Power Input
5V_IN
GND Power Input
GND_IN
+5V
C1
1µF 25V
U2
VIN
VOUT
GND
MCP1702T-3302E/CB
+3V3
C2
1µF 25V
+3V3 +3.3V
+5V +5V
GND
T1
BC846
R3 5.6K
R4 47K
GND
U$1
BLUETOOTH_TRAVERSANT
TX
RX
KEY_HC05
LED2_HC05
LED_HC05
KEY_HC06
LED_HC06
RST
3V3
GND
+3V3
C7
10 µF
R5
10K
Con 5pts 2.54mm
J2-1
J2-2
J2-3
J2-4
J2-5
J2-6
Prog/Debug PIC
U1
VDD_2
VDD
VDDCORE/VCAP
~MCLR
RA0/AN0/C1INA/ULPWU/PMA6/RP0
RA1/AN1/C2INA/PMA7/RP1
RA2/AN2/VREF-/CVREF-/C2INB
RA3/AN3/VREF+/C1INB
RA5/AN4/SS1/HLVDIN/RP2
OSC2/CLKO/RA6
OSC1/CLKI/RA7
RB0/AN12/INT0/RP3
RB1/AN10/PMBE/RTCC/RP4
RB2/AN8/CTEDG1/PMA3/REFO/RP5
RB3/AN9/CTEDG2/PMA2/RP6
RB4/PMA1/KBI0/RP7
RB5/PMA0/KBI1/RP8
RB6/KBI2/PGC/RP9
RB7/KBI3/PGD/RP10
VSS_2
VSS
NC_2
NC_3
NC_4
NC
RE2/AN7/PMCS
RE1/AN6/PMWR
RE0/AN5/PMRD
RD7/PMD7/RP24
RD6/PMD6/RP23
RD5/PMD5/RP22
RD4/PMD4/RP21
RD3/PMD3/RP20
RD2/PMD2/RP19
RD1/PMD1/SDA2
RD0/PMD0/SCL2
RC7/PMA4/RX1/DT1/RP18
RC6/PMA5/TX1/CK1/RP17
RC5/SDO1/RP16
RC4/SDI1/SDA1/RP15
RC3/SCK1/SCL1/RP14
RC2/AN11/CTPLS/RP13
RC1/T1OSI/RP12
RC0/T1OSO/T1CKI/RP11
PIC18F44J11-I/PT
3 DSI/DSO for Test only
RD3
RD2
RD1
RC3
RC2
Test only
C4 12pF
Q1
32.768 kHz
C3 12pF
+3V3
C5
100nF
C6
100nF
GND
+3V3
R2
680
LED2
Blue 3mm
Con 2.45mm
J1-1
J1-2
R7
10K
TITLE: BlueCom_Board
Document Number:
REV:
Date: 25/02/2013 21:43:42
Sheet: 1/1