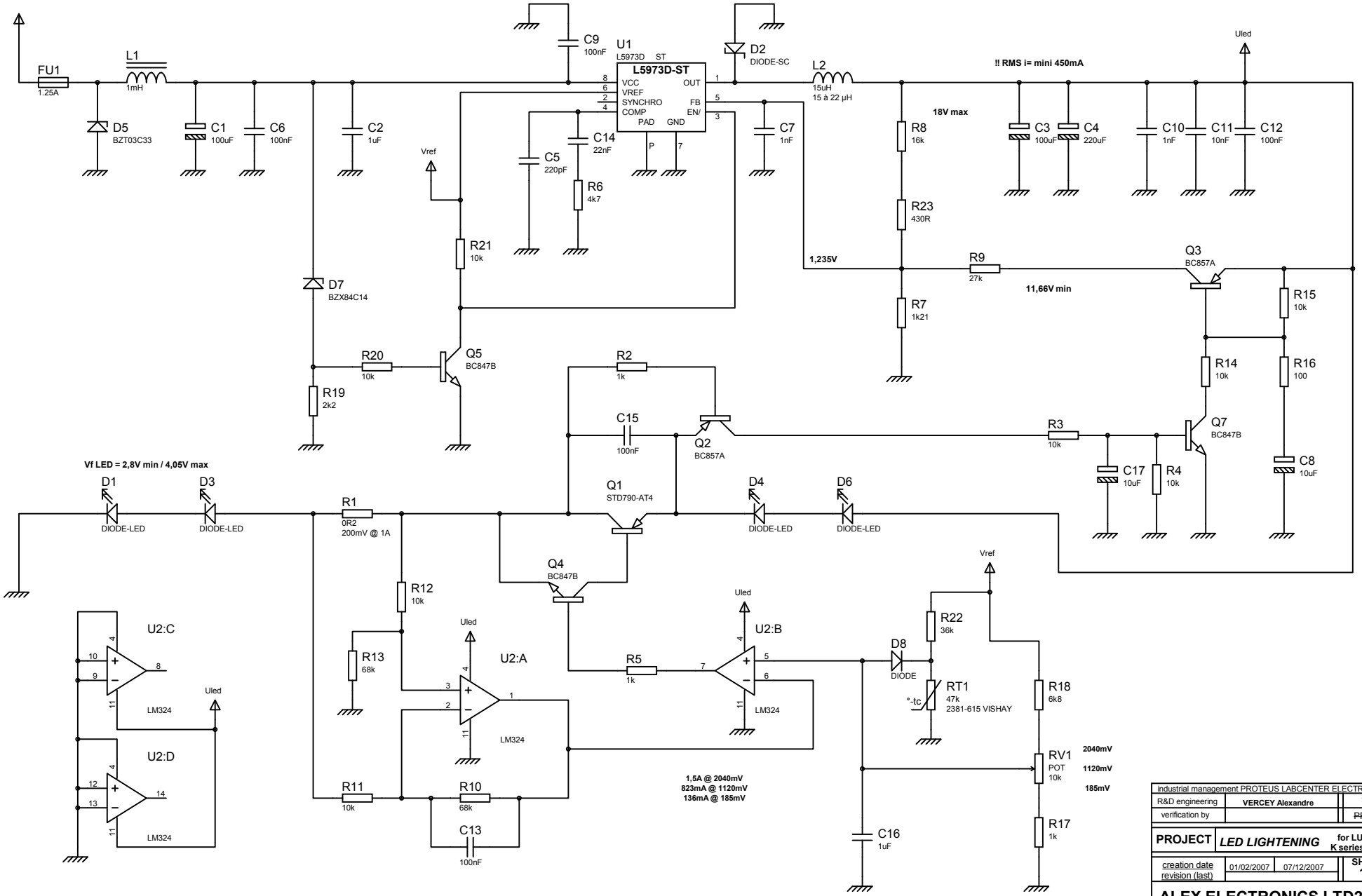
FU1
1.25A
L1
1mH
D5
BZT03C33
C1
100uF
C6
100nF
C2
1uF
D7
BZX84C14
R19
2k2
R20
10k
Q5
BC847B
R21
10k
Vref
C9
100nF
U1
L5973D ST
L5973D-ST
VCC
VREF
SYNCHRO
COMP
PAD
GND
OUT
FB
EN/
P
C14
22nF
C5
220pF
R6
4k7
D2
DIODE-SC
C7
1nF
L2
15uH
15 à 22 µH
!! RMS i= mini 450mA
Uled
18V max
R8
16k
R23
430R
R7
1k21
1,235V
R9
27k
11,66V min
Q3
BC857A
R15
10k
R14
10k
R16
100
C3
100uF
C4
220uF
C10
1nF
C11
10nF
C12
100nF
R2
1k
C15
100nF
Q2
BC857A
R3
10k
Q7
BC847B
C17
10uF
R4
10k
C8
10uF
Vf LED = 2,8V min / 4,05V max
D1
DIODE-LED
D3
DIODE-LED
R1
0R2
200mV @ 1A
Q1
STD790-AT4
D4
DIODE-LED
D6
DIODE-LED
Q4
BC847B
R12
10k
R13
68k
U2:A
LM324
U2:B
LM324
U2:C
LM324
U2:D
LM324
R5
1k
D8
DIODE
R22
36k
RT1
47k
2381-615 VISHAY
*-tc
R18
6k8
RV1
POT
10k
2040mV
1120mV
185mV
R17
1k
C16
1uF
R11
10k
R10
68k
C13
100nF
1,5A @ 2040mV
823mA @ 1120mV
136mA @ 185mV
industrial management PROTEUS LABCENTER ELECTRONICS
R&D engineering
VERCEY Alexandre
VG
verification by
PROTO
PROJECT
LED LIGHTENING
for LUXEON
K series (white)
creation date
01/02/2007
revision (last)
07/12/2007
SHEET
1/1
ALEX ELECTRONICS LTD2005