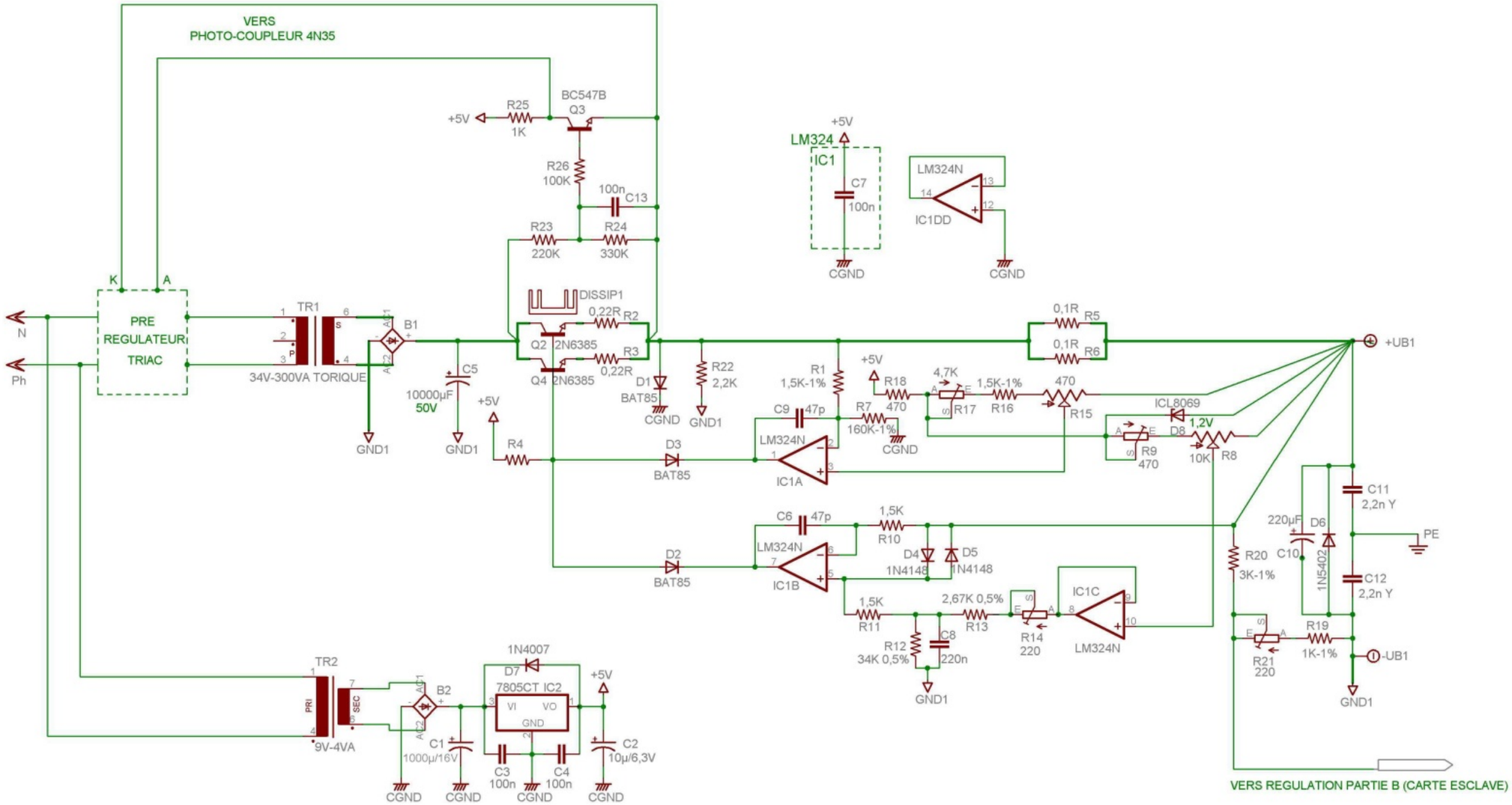

REGULATION PARTIE A (CARTE MAITRE)

TITLE: REGULATION1	
Document Number:	REV: 1.1
Date: 01/07/2006 10:16:59	Sheet: 1/1